AGENDA
HIGHLAND CITY COUNCIL MEETING
July 21, 2015

5:30 p.m. Closed Executive Session
7:00 p.m. Regular City Council Session
Highland City Council Chambers, 5400 West Civic Center Drive, Highland Utah 84003

5:30 P.M. CITY COUNCIL CLOSED EXECUTIVE SESSION

The City Council will hold a closed executive session for the purpose of discussing:

- The purchase, exchange, or lease of real property and reasonably imminent litigation;
- The sale of real property; including any form of water right or water shares;
- The character, professional competence, or physical or mental health of an individual.

Pursuant to Section 52-4-205(1) of the Utah State Code Annotated.

7:00 P.M. REGULAR SESSION – CITY COUNCIL CHAMBERS

CALL TO ORDER – Mayor Mark Thompson
INVOCATION – Rod Mann
PLEDGE OF ALLEGIANCE – Brian Braithwaite

APPEARANCES

Time has been set aside for the public to express their ideas, concerns, and comments.
(Please limit your comments to three minutes each.)

PRESENTATION

1. Utah Local Governments Trust – Brent Oakeson

2. Utah Lake Commission – Eric Ellis

CONSENT

3. **MOTION: Approval of Meeting Minutes for City Council Regular Session** – June 2, 2015

4. **MOTION: Ratifying the Mayor's Appointment to the Highland City History Committee –** Kellie Johnson.

ACTION ITEMS

5. MOTION: Conditional Use Permit for a 86 unit Multi-Family Townhome Development in the Town Center Flex Use Zoning District - Blackstone

6. MOTION: Approval for the Reconstruction of the Dry Creek Phase 3 Trail

7. MOTION: Approval and Authorize the Mayor to sign a contract for Transcription Services for City Council Meeting Minutes – C. Price Transcription LLC

8. RESOLUTION: Amendments to the Personnel Policy and Procedures Manual for Highland City Employees – Personnel Vacation Policy

9. RESOLUTION: Amending a Utility Connection Fee – Culinary Water Connection Fee

10. ORDINANCE: Adoption of an Engineering Design Criteria and Standard Drawings for Public Improvements

MAYOR/ CITY COUNCIL & STAFF COMMUNICATION ITEMS

A. Park Maintenance Building – Nathan Crane
B. Salt Storage Building – Justin Parduhn
C. Alpine School District Land Exchange – Nathan Crane
D. Operational Safety Report Study – Nathan Crane
E. City Website – Nathan Crane

ADJOURNMENT

(These items are for information purposes only.)

Description	Requested/Owner	Due Date	Status
Road Capital Improvement Plan for FY 15-16 *Prioritize and Communicate to Residents*	City Council	~	Continued Discussion
Determine Park Use for Recreation	City Council Parks Staff	TBD	Staff to make Recommendations
Building Use Policy - Fees	Rod Emily	August 4, 2015	In Progress
HW Bldg. – PW Storage Status	City Council Mayor/PW	End of 2015	In Progress

CERTIFICATE OF POSTING
The undersigned duly appointed City Recorder does hereby certify that on this **16th day of July, 2015,** the above agenda was posted in three public places within Highland City limits. Agenda also posted on State (http://pmn.utah.gov) and City websites (www.highlandcity.org).

JOD'ANN BATES, City Recorder

- In accordance with the Americans with Disabilities Act, Highland City will make reasonable accommodations to participate in the meeting. Requests for assistance can be made by contacting the City Recorder at 801-772-4505, at least 3 days in advance to the meeting.
- The order of agenda items may change to accommodate the needs of the City Council, the staff and the public.
- This meeting may be held electronically via telephone to permit one or more of the council members to participate.

THE PUBLIC IS INVITED TO PARTICIPATE IN ALL CITY COUNCIL MEETINGS.

MINUTES
HIGHLAND CITY COUNCIL MEETING
Tuesday, June 2, 2015

Highland City Council Chambers, 5400 West Civic Center Drive, Highland, Utah 84003

PRESENT: Mayor Mark S. Thompson, conducting
Councilmember Brian Braithwaite
Councilmember Dennis LeBaron
Councilmember Tim Irwin
Councilmember Jessie Schoenfeld
Councilmember Rod Mann

STAFF PRESENT: Aaron Palmer, City Administrator
Nathan Crane, Community Development Director
Gary LeCheminant, Finance Director
JoD'Ann Bates, City Recorder
Justin Parduhn, Public Works O&M Director
Brian Gwilliam, Chief of Police
Tim Merrill, City Attorney

OTHERS: Dale Wheeler, Linda Smuin, Matt Church, Ed Barfuss, Natalie Morton, Stan Mead, Joan Schietelbine, Jen Ashcraft, Nate Barreti, Edward Robbins & Dena, Oennie & Fay Butterfield, Ann Given, Dyanne Law, Keldon Paxman, Linda Olpin, Mira Freeman, Mark Freeman, Deanna Holland, Michael Austin, Jacob Parra, Brayden Blodgett, Miles Merrill, Pat Hollingshal's, Diana Pitcher, Wendi Loosle, Dylan Topham, Devin Astin, Matt Bean, Matthew Gedris, Carter Scott, Jeremy Crane, Garrett Kimber, Ethan Smith, Zack Bean, Jake Bean, Wesley Stevensen, Trevor Sorensen, Lance Greers, Staci Mecham, Michelle DeKorver, Mike Decarlo, Steve Mackay, Suzanne Machay, Clarinda Decarlo, Kathy Mead, Susie Johnson, Dina Love, Jennifer Moulder, Joan Schiefelbine, Brett Johnson, Lyzie Johnson, Dauio Parra, Emily Cahoon, Ashley Parra, Jeff Ferraro, Matt Stephens, Maddison Chesler, Mckenzie Chesler, Cynthi Chesler, Danielle Chesler, Wendi Loosle, Gil Wilburn, Wayne Wilburn, Tanya Colledge, Kaitlyn Cahoon, Olivia Wride, Lynn Hancock, Anne – Marie Hancock, Lisa Haulde, Daniel Asay, Matt Cahoon, Julie Morrill, Jeff Anderson, Heather Anderson, Kara Lowe, Carrie Peters, Glenn Peters, Cindy Larsen, Robert Lewis, Stephanie Lewis, Michael Lewis, Steven Lewis, Robby Lewis, Zoe Waters, Tina Waters, Dan Vest, Cristi Staheli, Randy Relyea, Lynne Power, Nathan Harward, Joel Wride, Jamie Wride, Jean Whitney, Mark Whitney, Michael Asay, Wendy Asay, Matt Mecham, Staci Mecham, George Ramjoue, Larry A. Landen, Jay Olpin, Gerald Naumann, Brion Cahoon, Jason Nelson, Sheila Packard, Vern Cahoon, Evelyn Cahoon, Missy Church, Karene Pierson, Andrea Morley, David Morley, Jill Tew, Kirsten King, Emma King, Cathy King, Alauna McGahan, Tim Heyrend, Ally Bell, Jason Bell.

The meeting was called to order by Mayor Mark S. Thompson as a Regular Session at 7:00 p.m. The meeting agenda was posted on the *Utah State Public Meeting Website* at least 24 hours prior to the meeting. The prayer was offered by Mayor Mark Thompson, and the Pledge of Allegiance was lead by Boy Scout, Ethan Smith.

APPEARANCES:

Julie Brinkerhoff stated that on the evening of May 25, she received a phone call and was informed of an accident at Highland Blvd and 118 North. Ms. Brinkerhoff expressed how devastated she was when she learned that the individuals involved in the crash were Mailee and Christine Andersen, who also live in the neighborhood. Sadly, the accident resulted in Mailee losing her life. Julie expressed concerns with other traffic accidents that have occurred, and wondered if any of these could have been avoided with better traffic safety intervention. It is the community's responsibility to do everything possible to protect the lives of those who live along this road. This particular intersection is a higher risk intersection, and Ms. Brinkerhoff noted that she has started circulating a petition on the issue. Currently, she has collected 301 signatures, in an effort to urge the City Council to approve a traffic light at this particular intersection. Furthermore, there has been another petition in circulation calling for a roundabout and/or three-way stops. Ultimately, any method of safety is better than nothing. She noted that a traffic study has been ordered, although was concerned with the level of its accuracy due to the timing in which it will be conducted. Julie continued that every day that she passes that intersection she will be reminded of the families who have been affected by the accidents that have taken place in that area. She concluded her remarks by imploring that the Council take action, and noted that she has spoken with an experienced engineer who can provide suggestions on potential actions.

Tanya Colledge added to Ms. Brinkerhoff's remarks by stating that she expressed similar concerns regarding the intersection in question, in a Council meeting about one year ago. Ms. College explained that she hopes the petition will encourage the change that needs to take place.

Emma King stated that she is representing her family today. She agreed with Ms. Brinkerhoff by stating that the aforementioned intersection is extremely dangerous. Ms. King stated that her sister was involved in an accident at the same intersection three years ago, and noted that her sister was in attendance at the meeting. Ms. King remarked that she wishes she had started lobbying for added safety measures at this intersection three years ago, and detailed possible solutions.

Kirsten King spoke about the car accident with which she was involved three years ago at the intersection of Highland Blvd and 118 North. Ms. King commented that in the blink of an eye her life was changed forever. She expressed full support for the petition urging the Council to implement better traffic control.

Joan Schietelbine introduced herself as the grandmother of Mailee Andersen, who recently lost her life in an accident at the intersection. Ms. Schietelbine echoed previous comments which were made, and expressed grief for her loss.

Kara Lowe mentioned that she lives on the hill near Draper. She explained that she drives this road frequently to take her kids to school, and has had several close calls as well. She was of the opinion that a roundabout could better control speed for drivers coming down the hill, as opposed to a stop light or stop sign that people can easily ignore. She stated that she hopes that a solution can soon be reached for the safety and protection of all families.

Tim Irwin remarked that as a Council, they are listening to the public's comments and concerns. He stressed that they are taking necessary steps in order to make the aforementioned intersection safe. He thanked everyone for sharing their comments, and stated that the families who have been affected by recent car accidents are in his prayers.

Mayor Thompson empathized with the families who have lost loved ones in recent accidents, and assured the public that staff and elected officials are doing all that they can to prevent future incidents

CONSENT ITEMS:

MOTION: Ratifying the Mayor's Appointments to the Highland City History Committee – Brenda Thurgood and Donna Kitchen.

MOTION: Councilmember Tim Irwin moved the City Council approve the consent items on the agenda.

Seconded by Rod Mann.
Unanimous vote, motion carried.

PUBLIC HEARING:

There were no public comments.

ACTION ITEMS:

RESOLUTION: Approval of Amended Budget – Fiscal Year 2014-2015

BACKGROUND: *The City is required to keep expenditures within budget. As the Council is aware, accurately forecasting all the expenditures and needs of the community is difficult; therefore, budget amendments may be necessary to comply with State requirements. It is necessary to amend the budget to adjust for and various unanticipated expenditures in certain funds of the City.*

Gary LeCheminant, Finance Director highlighted a couple of the City's final adjustments, and stated that the revenues and expenses are matched at around $7.932 million. The City is using $164,000 less from the General Fund surplus. Cemetery revenue is up $40,000, fees are $12,000

and revenue from garbage is up $22,000, due to an increase in users. Additional details pertaining to fees were discussed.

Mayor Thompson opened the Public Hearing. There were no public comments.

MOTION: Councilmember Rod Mann moved the City Council approve a Resolution for the Fiscal Year 2014-2015 Budget Amendments

Tim Irwin seconded the motion.

Those voting aye: Rod Mann, Jessie Schoenfeld, Tim Irwin, Dennis LeBaron and Brian Braithwaite.
Those voting nay: none
Motion carried.

MOTION: Park Maintenance Building – Conditional Use Permit

BACKGROUND: *The site is designated as Low Density Residential on the General Plan Land Use Map. The site is zoned R-1-40 (Residential Zone). Public buildings and grounds are permitted in the R-1-40 District subject to a conditional use permit. The subject property is part of the Highland Town Center Meadows Subdivision. Half of the property is manicured open space/parkland. The other half is natural vegetation with an open ditch. There is an existing trail on the property which will be removed. The City Council has been discussing a location for a park maintenance facility (see Attachment 3). The project budget is $300,000. A Conditional Use Permit is an administrative action.*

Nathan Crane, Community Development Director presented the staff report, and stated that Conditional Use Permits are an administrative process. Review is focused on compliance with the development code and mitigating adverse impacts. This particular application is unique in that the property is owned by the City. Nathan noted that a public hearing was held last Tuesday for the Planning Commission. Nathan presented a chart of the sites and reviewed other considerations that have been made. He stated that this decision has not been easy, and extensive research has gone into this process. They are trying to determine the best location for the City, and which option would provide the best service for the residents. It was noted that the Planning Commission recommended denial of the Conditional Use Permit at this particular location. There was some interest in splitting up the facility and alternatively putting small storage areas around the City.

MOTION: Rod Mann moved the City Council withdraw consideration of the Park Maintenance Building being located at the Town Center location.

Tim Irwin seconded the motion.

Brian Braithwaite expressed concerns with a decision being reached prior to any discussion taking place.

Rod Mann remarked that prior to being on the Council, he attended meetings for two years and observed many times when the Council would vote against what was recommended by the Planning Commission. He made a personal decision not to vote contrary to that which comes forward as a recommendation by the Planning Commission, unless there were extenuating circumstances or no other alternatives. In this case, he feels that there are other alternatives.

Brian Braithwaite provided an overview on the project, and the process by which elected officials arrive at a decision. He expressed that he is not in favor with moving forward with this proposal, and explained that he does not want something in the City that will deter from the beauty of the community. He was concerned that while the facility may initially look nice, over time it will be difficult to maintain and would become an eyesore in the City Center.

Tim Irwin agreed with Councilmember Braithwaite's comments relating to how difficult the decision making process can be for the Council. He remarked that they are a representative government, and it is therefore important to have public input on important issues.

Dennis LeBaron echoed the comments made by other Councilmembers, and expressed a willingness to go back to the drawing board to try again.

Rod Mann suggested possibly outsourcing parks maintenance, noting that they might not even need the proposed building.

Unanimous vote.
Motion carried.

<u>MAYOR, CITY COUNCIL & STAFF COMMUNICATION ITEMS:</u>
(These items are for information purposes only and do not require action or discussion by the City Council)

- Highland Blvd. & 11800 North

Nathan Crane commented that after the accident occurred at the aforementioned intersection, he quickly began researching traffic safety options. In doing this research, he developed a two-step process. The first step is to create an operational safety report, which includes the hiring of a consultant to assess traffic safety and design issues at Highland Boulevard and 118 North for the past ten years. A preliminary plan would be presented on July 21, 2015, which will include recommendations. Depending upon the recommendations presented, the next step would be to do a warrant study which analyzes different criteria. Staff recently met with two different consultants who could conduct these studies. Nathan felt that the two reports would be very

valuable to have no bias opinion. He noted that each study costs around $4,000 to $4,300 each. Furthermore, he suggested that the actual counts be postponed until after August 19, so that more accurate counts can be collected.

Councilmember LeBaron if the lines on the turn lanes could be re-painted prior to the City determining an appropriate long-term solution.

Other temporary solutions were discussed, and Councilmember Braithwaite asked if there is any other signage that can be placed in the interim.
Justin Parduhn, Public Works Director wasn't sure of any signs that could be used, but stated that staff can re-paint the lines on the road. Another suggestion was made to install a blinking speed limit tracker to remind drivers of the speed limit.

Mayor Thompson advised the Council to wait for study results prior to making a spending decision.

Brian Braithwaite commented that this intersection has been problematic for the past five years, even when there was less traffic in the area. Now that there are new subdivisions being developed, the issue will become worse.

Nathan Crane expressed that it is in the City's best interest to re-evaluate the Transportation Master Plan, and stated that it hasn't been updated since 2007. Once the Transportation Master Plan is updated, a capital plan can then be created. Nathan explained that the study will use existing data on traffic of the intersection, and stated that the primary focus will be the design of the intersection. Staff will assess car accidents that have occurred in the past ten years, and categorize them while looking at the overall design.

Ed Barfuss, a resident explained how previously on Country Club Drive there had been multiple accidents due to excessive speeding. He recalled an incident in which a speeding driver destroyed property and pushed another car out into the street. For residents and people visiting the club it was a very dangerous road. Consequentially, a road study was completed which lead to the installment of two radar activated signs. Overall, these signs have caused speeding on that road to diminish considerably. There was discussion as to whether or not data exists to support whether or not speeding has decreased on Country Club Drive, and Nathan Crane agreed to further pursue the collection of such information.

- HB362 – Transportation Infrastructure Funding Information and Sample Resolution

Mayor Thompson stated that the remainder of the meeting will be a discussion regarding HB 362, which relates to information on transportation funding. Discussion will take place to determine what exactly will be placed on the ballot for a vote, and whether or not the item will be voted upon this year or next year. The bill has two parts, including a change to gas tax which will become effective January 1, 2016. This increase will automatically start generating

additional revenue. The second part of the bill is an optional quarter cent sales tax increase, and currently the Utah League of Cities and Towns (ULCT) is circulating a model Resolution for cities to pass in support of the tax increase. Mayor Thompson stated that if the Council passes the proposed Resolution, Highland City would be indicating support for this additional tax.

A general breakdown of how funds will be distributed was discussed. Furthermore, it was noted that there are specific parameters for which the funds can be used. Even if Highland City opts to not pass the model Resolution as has been proposed by ULCT, the tax itself could still be approved, and funds distributed to cities based on a calculated formula. Additional comments were made regarding the benefits that the optional quarter cent sales tax would provide cities.

ADJOURNMENT INTO CLOSED EXECUTIVE SESSION:

- Pending or reasonably imminent litigation

  Pursuant to Section 52-4-205(1)(c) of the Utah State Code Annotated.

MOTION: Rod Mann moved the City Council adjourn into closed Executive Session.

Jessie Schoenfeld seconded the motion.
Unanimous vote. Motion carried.

ADJOURN CITY COUNCIL MEETING:

MOTION: Tim Irwin moved the City Council adjourn the Regular Open Meeting.

Dennis LeBaron seconded the motion.
Unanimous vote. Motion carried.

Meeting adjourned at 8:46 p.m.

_____
JoD'Ann Bates, City Recorder

Date Approved: July 21 , 2015

CITY COUNCIL AGENDA REPORT

Item # 4

DATE: Tuesday, July 21, 2015

TO: Members of the City Council

FROM: Mayor Mark S. Thompson

BY: JoD'Ann Bates, City Recorder

SUBJECT: RATIFYING THE MAYORS APPOINTMENT TO THE HISTORY COMMITTEE

BACKGROUND:

On May 19, 2015, a resolution was approved by the City Council to create a History ADHOC Committee to recommend, develop, support, implement programs and activities to promote community awareness and participation in city history, and help preserve knowledge and resources for future generations.

Mayor Thompson has reviewed the applications and feels they would bring great insight and be an asset to have as members of the committee.

FISCAL IMPACT:

N/A

ATTACHMENTS:

- Volunteer Application

HIGHLAND CITY

Highland City • 5400 W. Civic Center Dr., Suite 1 • Highland, UT 84003
(801) 756-5751 • Fax (801) 756-6903

Highland City Volunteer Statement of Interest

The residents of Highland have great pride in their City. The City utilizes many volunteers in numerous capacities to improve the overall quality of life in our town.

In order to encourage this participation, Mayor Richie is requesting statement of interests from those who are willing to serve. As vacancies or needs arise within the City, the Mayor and the Community Enhancement Coordinator will review the statements, conduct interviews and make a selection(s).

If you are interested in serving as a volunteer within Highland City, please submit this Statement of Interest to the City Offices.

Name Kellie Johnson Date 6/22/15
Phone number [redacted] Email address [redacted]gmail.com
Residence address [redacted]

Please fill out the following form or attach a resume type document listing expertise, experience, interests, etc.

How long have you resided in Highland City? Not a resident
Occupation Admin at UVU Digital Media Department / Student
Education Master of Library Science/Archives Certificate, BA in History
Are you able to meet in the evenings? yes Semi-monthly yes Monthly yes
List any background and experience you have that you think would be helpful to the Committee or Commission you would like to serve: I started the organizational elements of the Highland Library's Special Collections + Manuscript Archive while I was an employee. Currently I volunteer my free time to organize the collection into archival folders and boxes.
Please state why you would like to serve: I have a passion for history and would like to see that the library's collection is preserved properly and made available to the community.
If not selected for an immediate opening, do you wish to be considered for the next opening? yes
Additional comments:

Please select your interest:

Standing Committees		Ad Hoc Committees
Arts Council	Planning Commission	Economic Development
Beautification	Historical Committee	Open Space
Highland Fling		Parks
Tree Commission		Transportation
Youth Council		

Submittal of a Statement of Interest does not guarantee an appointment to a committee

advisor

CITY COUNCIL AGENDA REPORT

Item #5

DATE: July 21, 2015

TO: Honorable Mayor and Members of the City Council

FROM: Nathan Crane, Interim City Administrator/Community Development Director

SUBJECT: MOTION – CONDITIONAL USE PERMIT FOR A 86 UNIT MULTI-FAMILY TOWNHOME DEVELOPMENT IN THE TOWN CENTER FLEX USE ZONING DISTRICT (CU-15-02 – BLACKSTONE)

STAFF RECOMMENDATION:

Staff recommends that the Council **CONTINUE** the request to the August 18, 2015 City Council meeting to allow a traffic study to be completed by the City and the applicant to address the issues outlined by the Council in accordance with Section 3-4732.

BACKGROUND:

Tim Alders is requesting a conditional use permit for an 86 unit multi-family development located at the northeast corner of Town Square East and Parkway East. The site is 7.76 acres in size and is owned by Frank and Maria Carlone.

The site is designated as Mixed Use Development on the General Plan Land Use Map. The site is zoned Town Center Flex-Use District. Multi-family residential developments are permitted in this district subject to review and approval of a conditional use permit.

A maximum of 342 units are permitted in the Town Center Flex-Use District. A project cannot exceed 12 units per acre. Toscana was approved for 200 units leaving 142 units. If this project is approved 56 units will remain.

CONDITIONAL USES:

Conditional uses are tolls that are meant to give limited flexibility in the review of an application. In Highland, the Planning Commission makes a recommendation to the City Council. A conditional use is regulated by the following standards:

Utah State Code 10-9a-507. Conditional Uses.

(1) A land use ordinance may include conditional uses and provisions for conditional uses that require compliance with standards set forth in an applicable ordinance.

(2)

(a) A conditional use shall be approved if reasonable conditions are proposed, or can be imposed, to mitigate the reasonably anticipated detrimental effects of the proposed use in accordance with applicable standards.

(b) If the reasonably anticipated detrimental effects of a proposed conditional use cannot be

substantially mitigated by the proposal or the imposition of reasonable conditions to achieve compliance with applicable standards, the conditional use may be denied.

If a use is allowed as a conditional use it is assumed that the use is desirable but that it may require an extra level of review. Denial must be based on some factor unique to the proposed location that renders the potential negative effects of the proposed use beyond mitigation. Mitigation means to temper or reduce the negative aspects, not eliminate them.

The action taken in response to an application must be supported by substantial evidence in the record. Substantial evidence is evidence that is relevant and credible. To be relevant, it must relate to the standards in the ordinance. To be credible it must be objective and independent.

TOWN CENTER OVERLAY REVIEW STANDARDS/PROCESS:

Architectural

For development in the Town Center, the Planning Commission is the land use authority for the Architectural Review. The review is based on the following findings:

- The proposed development complies with all provisions of this ordinance, Commercial Design Standards, and all other ordinances, master plans, general plans, goals, objectives and standards of Highland City.
- The height, location, materials, color, texture, area, setbacks, and mass, as well as parts of any structure (buildings, walls, signs, lighting, etc.) and landscaping, is appropriate to the development, the community and the Transit Center Overlay.
- The architectural character of the proposed structures is in harmony with, and compatible to, structures in the neighboring environment and the architectural character desired for the Transit Center Overlay; avoiding excessive variety or monotonous repetition.

Site Plans

For site plans, the Planning Commission makes a recommendation to the City Council. The review is based on the following findings:

- The proposed development complies with all provisions of this ordinance, Commercial Design Standards, and all other ordinances, master plans, general plans, goals, objectives and standards of Highland City.
- The proposed site development plan's building heights, building locations, access points, and parking areas will not negatively impact adjacent properties or the surrounding neighborhood.
- The proposed development promotes a functional relationship of structures to one another, to open spaces, and to topography both on the site and in the surrounding neighborhood.
- Ingress, egress, internal and external traffic circulation, off-street parking facilities, loading and service areas, and pedestrian ways, is so designed as to promote safety and convenience.
- All mechanical equipment, appurtenances and utility lines are concealed from view and integral to the building and site design.

SUMMARY OF REQUEST:

1. The applicant is requesting approval of a conditional use permit for an 86 unit multi-family development. All units are three bedroom units that are 3,667 square feet (3,139 square foot of living area and 528 square foot garage). The number of units per building will range from three to six. Owners will own each unit.

2. The primary ingress/egress to the project will be from Parkway East and Town Square East/ Parkway East will be completed as part of this project.

3. The project will be built in two phases. The first phase will be north of Parkway East and the second phase will be south of Parkway East.

4. The maximum setback is provided along Parkway East and Town Square East.

5. Approximately 1.61 acres (20%) of the site will be landscaping (15%) and hardscape (5%) meeting the requirement for 15% landscape and 5% hardscape areas. Amenities include a pool, play structure, and gazebos.

6. All roads within the development are private and will be owned and maintained by a Home Owners Association (HOA). The roads include 26 feet of asphalt with two feet of flat curbing.

7. The site provides 258 parking spaces. Each unit will have a two car garage (24'X 22') and there are 86 guest parking spaces. The Development Code requires 3 spaces per unit. The standard two car garage is typically 24' X 24'

8. Each unit will have their own garbage and recycling containers. The containers will be stored in the garage.

9. A wrought iron fence will be on the perimeter of the property expect adjacent to street right of ways. The applicant has indicated he is willing to install a six foot concrete wall.

10. The buildings are three stories and 36' 11" high to the top of the roof. The maximum height permitted is 50 feet. The maximum number of stories is three. The applicant has chosen a Tuscan architectural theme. Colors include different shades of brown.

CITIZEN PARTICIPATION:

Notice of the June 18, 2015 Neighborhood meeting was mailed to all property owners within 500' of the proposed plat on June 3, 2015. Four residents attended the meeting. The developer presented and overview of the project. One gentleman came to the meeting asking if they could be rentals, developer said they were not intended to be. One person was concerned with the density and building height, the developer assured her that they were in compliance with the code. One couple was concerned with the rod iron fence and children feeding their horses through it and her flood irrigation.

Notice of the June 30, 2015 Planning Commission meeting was published in the Daily Herald on June 14, 2015. Notice of the meeting was also mailed to all property owners on June 10, 2015. Several residents spoke in opposition of the project.

Notice of the July 21, 2015 Planning Commission meeting was published in the Daily Herald on July 5, 2015. Notice of the meeting was also mailed to all property owners on July 9, 2015. One comment in opposition of the project has been received.

Public notification of the City Council meeting is not required.

REQUIRED FINDINGS:

The City Council must determine that the proposed use meets three findings prior to granting a Conditional Use Permit. The burden of proof rests with the applicant. Each finding is presented below along with staff's analysis.

1. **The use will not be detrimental to the health, safety, or general welfare of persons residing or working in the vicinity or injurious to property or improvements in the vicinity.**

The property to the north and east is zoned Town Center Commercial Retail and is the Ridley's shopping center, Tim Tire, Arctic Circle, Ace Hardware, and an existing home. The property to the south is zoned Town Flex-Use and is planned for a City library. The property to the west is zoned Town Center Civic. The proposed use is compatible with the surrounding properties.

2. **The use complies with all applicable regulations in the Development Code.**

The proposed density is 11.27 which is less than the maximum of 12 units per acre permitted.

The number of units will not exceed what is allowed in the district.

There does not appear to be enough room in the garage for these containers and two vehicles. In addition, some of the garage space may be used for personal storage. This could result in the loss of a parking spaces and/or the storage of garbage and recycling containers in the private drive. Staff recommends that trash enclosures be used.

The Fire Marshall has reviewed the site plan for fire access requirements. The proposed project meets the requirements of the Fire Code.

An irrevocable maintenance fund will need to be established by the CC+R's to ensure maintenance of the private roads. Staff is recommending that a note be placed on the final plat to inform potential home buyers of this issue.

Public water, sewer, and storm drain lines are proposed in the private roads. The City Engineer and Public Works Department will need to approve the location of all utilities prior to final plat approval. In addition, an easement to allow access to these lines will need to be included.

The location of water, sewer, and pressurized irrigation lines in relation to lot lines and building foundations will need to be reviewed with the civil improvement plans to ensure adequate spacing.

The City Engineer is concerned about the location of the balconies in relation to the right-of-way line. As such a stipulation requiring a minimum of five feet from the balcony to the right-of-way has been

included.

The character and long term success of this type of development requires an effective homeowners association and involved property owners. These types of units may be very attractive to investors and could become rental units over time. The developer will be able to limit the number of initial investors, but has no control over subsequent buyers. Staff has no way of knowing if rental units will be more of a problem here than in any other single family neighborhood.

3. **Conditions are imposed to mitigate any detrimental effects.**

Draft stipulations have been included to ensure compliance with the Development Code.

PLANNING COMMISSION ACTION:

The Planning Commission held two public hearings on this item on June 30, 2015 and July 14, 2015. At the July 14, 2105 meeting, the Commission voted 5-0 to recommend denial of the project for the following reasons:

- It does not meet the goals, objectives and standards of Highland City
- It does not meet the purposes set forth for the area around the Town Center as set forth in the Highland City Development Code in Section 3-4701
- It has access problems particularly in the northern area
- It has negative impact on the southern property which will become landlocked
- It does not promote a functional relationship within the development and within the surrounding areas particularly as it relates to open space functionality as it relates to its similarities to Toscana and the negative functional relationship that has been developed there
- It impacts the safety of the area in that the sidewalks are not functional and leading to the open spaces
- The open spaces are inconvenient
- Guest parking is sporadic
- There is no traffic impact study
- The entrance, exit and parking locations for service vehicles and signage for those service vehicles is currently undefined and appears to be unacceptable

CONCLUSION:

During the Commission public hearings there were a number of issues that were brought forward that need clarification. It is important to note that Section 3-4732 Application Procedures allows, staff, the Planning Commission, and the City Council to request any additional information to evaluate the character and impact of the proposed project.

1. The applicant submitted two signed affidavits that they were the owners of the property. However, at the July 15, 2015 meeting the owners were stated as Frank and Maria Carlone. The City cannot process an application for development without authorization from the property owner.
2. According to the information submitted by the applicant the basement and storage areas were not listed as options. At the June 30, 2015 meeting the applicant stated that these areas are

options. Approximately 924 square feet of the living space is in the basement and storage which is a buyer option. Excluding the garage and the basement, the living area is 2,215 square feet. Additionally, it is unclear how the buildings will be constructed to accommodate this option. Further the applicant stated that a place in the garage will be created to store garbage and recycling containers. However, a revised floor plan showing this area has not been submitted.

3. The elevations submitted do not list any options; however, at the June 30, 2015 meeting the applicant stated that the elevations included options. The elevations should be revised so that it is clear what approval the applicant requesting.
4. Parcel #11:0039:0135 is a 0.022 acre piece of property owned by Frank and Maria Carlone. According to the applicant this parcel is included as part of the project. However, this is not consistent with the submittal materials. If this parcel is not included in the development it leaves a small triangular piece of property with no street frontage or access.
5. The applicant mentioned that there is a reciprocal access easement for all land owners adjoining the access drive for the shopping center to the north. Staff has not received or reviewed the easement.
6. The applicant stated that parking on the private roads will be prohibited. It is unclear how this restriction will be enforced. Since they are private streets, this restriction cannot be enforced by the Lone Peak Police Department. In addition, some of guest parking units are up to 220 feet away from a unit. This could lead to onsite circulation and parking issues for guest, delivery and service vehicles as users are more likely to park on the private roads.
7. The proposed driveway throat adjacent to unit 86 will create a conflict with users entering/exiting the garage and users entering/exiting the property.
8. The units are three bedroom units which will attract young families. There is a lack of active play areas south of Parkway East.
9. The applicant stated that the pool will be 60' X 24'. It is unknown what the public health requirements are. Specifically, whether or not showers and restrooms are required.
10. The traffic impact on the surrounding streets is unknown. Section 3-4732 Application Procedures allows the City to request a traffic impact analysis. Staff suggests the City hire a traffic engineer to do a full traffic study.

RECOMMENDATION:

The City Council should hold a public meeting and:

1) Approve the conditional use permit with appropriate stipulations. Staff has prepared draft stipulations that could be used. Additional stipulations may also be needed. The Council may include any conditions which are deemed necessary to mitigate potential impacts and insure compatibility of the use with surrounding development, insure compliance with this ordinance, and which are required to preserve the public health, safety, and general welfare.
2) Deny the conditional use permit. If the Council denies the conditional use permit, appropriate and specific findings will need to be drafted.
3) Continue the conditional use permit to allow a traffic study to be completed by the City and the applicant to address the issues outlined by the Council in accordance with Section 3-4732.

Staff recommends that the Council **CONTINUE** the request to the August 18, 2015 City Council meeting to allow a traffic study to be completed by the City and the applicant to address the issues outlined by the Council in accordance with Section 3-4732.

DRAFT STIPUALTIONS:

The following are the draft stipulations:

1. The site plan shall conform to the site plan dated July 9, 2015, elevations, and landscape plan dated June 2, 2015, except as modified by these stipulations.

2. The location of water and sewer lines in relation to lot lines and building foundations shall be reviewed by the Engineering Department and Building Division with the civil improvement plans to ensure adequate spacing and appropriate locations.

3. Potential homebuyers shall be informed by CC&R's, affidavit, and posted notice in the model home sales office of the following:
   a. Ownership and maintenance of private streets.
   b. Responsibility for repairing private streets after utility maintenance.
   c. Parking restrictions for residents and visitors.
   d. Ownership and maintenance responsibility for all common areas.
   e. No more than four unrelated persons my live in a unit.

4. The property owner shall establish an irrevocable maintenance fund by the CC+R's to ensure maintenance of the private streets. In addition, all private streets shall be constructed to meet Town design standards.

5. A note shall be added to the Final Plat and the Covenants, Conditions, and Restrictions stating the Homeowner's Association shall be responsible for the maintenance of all private streets.

6. The civil construction drawings shall meet all requirements as determined by the Town Engineer.

7. The final landscape plans shall be reviewed and approved prior to issuance of a building permit.

8. A comprehensive sign plan addressing private drive signage, building addressing and permanent directional signage shall be submitted and approved prior to final plat approval. All signs shall be uniform in theme and appearance.

9. The Fire Marshall shall approve the location of all fire hydrants prior to approval of the civil construction plans.

10. Parking shall be prohibited on all private roads and enforced by the Home Owners Association.

11. A six foot concrete wall shall be installed along the property perimeter.

FISCAL IMPACT:

Unknown

ATTACHMENTS:

1. Site Plan, Landscape Plan, Elevations
2. Neighborhood Meeting Summary
3. Modified Site Plan

LEGEND

1. LANDSCAPED STREET MEDIAN
2. ADA RAMP
3. ACCESS GATE IN EXTERIOR FENCING
4. NEW SIDEWALK
5. PASEO/ PLAZA AREAS-SEE SITE PLAN DETAIL SHEET
6. GAZEBO/ GRILL AREA
7. STOP/ STREET SIGN
8. EXISTING 5' WIDE SIDEWALK TO BE UPGRADED TO A 15' WIDE SIDEWALK
9. WROUGHT IRON FENCING-SEE DETAIL SHEETS
10. FIRE ACCESS
11. LANDSCAPE PLANTER
12. CROSSWALK
13. POLE LIGHT-SEE LIGHTING SITE PLAN
14. STREET LIGHT-SEE LIGHTING SITE PLAN
15. STREET TREE AND GRATE-SEE DETAIL SHEETS
16. BIKE RACK-SEE DETAIL SHEETS
17. HIGH BACK CURB AND GUTTER
18. ROLLED GUTTER (All private roads)
19. CONCRETE DRIVEWAY
20. COMMUNITY FACILITY AREA
21. CHILDREN'S PLAY AREA
22. RECONSTRUCT MEDIAN FOR NEW INTERSECTION

JURISDICTION

LEGAL JURISDICTION:	HIGHLAND CITY
DISTRICT/ PLANING ZONE:	TOWN CENTER FLEX USE

AREA TABULATIONS

	AREA	% of total
TOTAL AREA:	7.8 acres	100%
BUILDING(s) AREA:	2.45 acres (107,136 sf)	32%
LANDSCAPE:	1.87 acres (81,293 sf)	24%
HARDSCAPE:	0.4 acres (18,955 sf)	5%
ROADS:	1.8 acres (79,436 sf)	23%

PARKING TABULATIONS

TOTAL UNITS:	86
ON SITE PARKING PROVIDED:	872 GARAGE
	86 STALLS
	258 TOTAL ON SITE
	(3.0 SPACES/ UNIT)

ACCESSIBILITY

ALL UNITS TO OFFER ELEVATORS FOR HANDICAPPED ACCESS

Project access point-full access

Summit Engineering Group Inc.
Structural • Civil • Surveying

6/2/2015 11:20:37 AM

REVISIONS	DATE	BY
1		
2		
3		
4		
5		
6		
7		
8		

CITY ENGINEER

DESIGN ENGINEER'S SEAL

PROJECT ENGINEER: BMB
PROJECT MANAGER: BMB
DRAWN BY: SCS
SCALE: AS SHOWN
ISSUE DATE: 4-1-15

PROJECT
BLACKSTONE PROJECT

SHEET TITLE
SITE PLAN

PROJECT
C15-006

SHEET
C-1

\\Sbg-server\pub\SCS Projects\CURRENT PROJECTS\C15-006 Highland\Working Files\Phasing\dwg\C15-006 Base Map.dwg

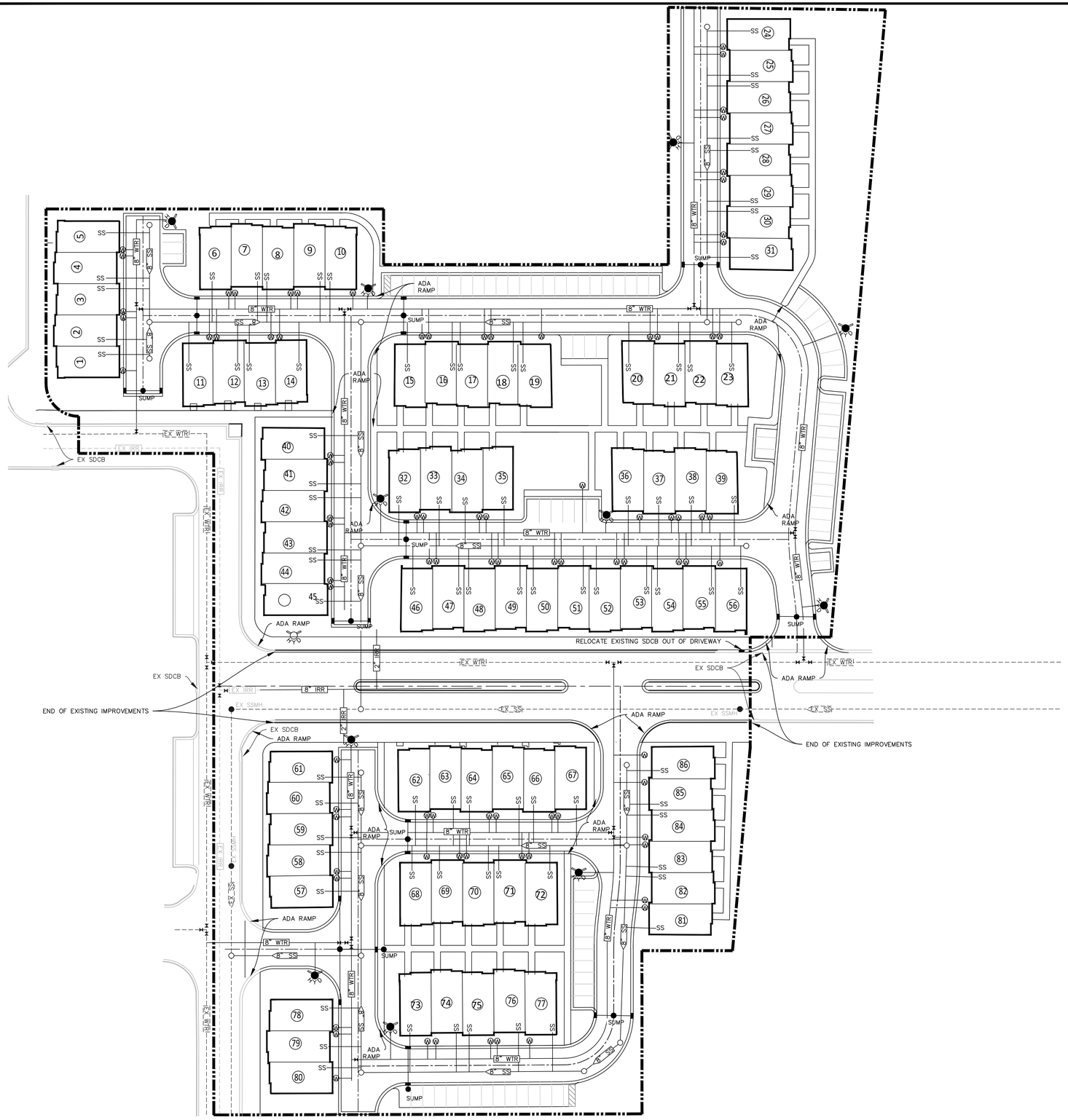

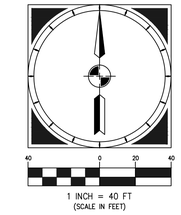

LEGEND

- WATER METER
- PROPOSED FIRE HYDRANT
- EXISTING FIRE HYDRANT
- PROPOSED VALVE
- EXISTING VALVE
- STORM DRAIN SUMP
- PROPOSED STORM DRAIN CATCH BASIN
- PROPOSED STREET LIGHT
- SANITARY SEWER MANHOLE

UTILITY NOTES

1. ALL CONSTRUCTION TO BE DONE ACCORDING TO HIGHLAND CITY STANDARDS ADN SPECIFICATIONS.
2. CULINARY WATER–48" MIN. DEPTH TO TOP OF 8" DUCTILE IRON PIPE, POLY–WRAPPED.
3. SEWER–8" SDR–35 PVC PIPE WITH 5' DIAMETER MANHOLES.
4. WATER TEES, ELBOWS, PIPE BEDDING AND TRENCHES SHALL BE INSTALLED PER HIGHLAND CITY STANDARDS.
5. ALL VALVES TO BE FLANGED TO THE TEE.

Summit Engineering Group Inc.
Structural • Civil • Surveying
55 WEST CENTER • P.O. BOX 176
HEBER CITY, UTAH 84032
P: 435–654–9229 • F: 435–654–9231

6/2/2015 10:04:21 AM

REVISIONS		
	DATE	BY
1		
2		
3		
4		
5		
6		
7		
8		

CITY ENGINEER

DESIGN ENGINEER'S SEAL

PROJECT ENGINEER: BMB
PROJECT MANAGER: BMB
DRAWN BY: DJN
SCALE: 1"=40'
ISSUE DATE: 06/02/2015

PROJECT
BLACKSTONE TOWNHOMES
A RESIDENTIAL SUBDIVISION

SHEET TITLE
UTILITY PLAN

PROJECT
C15–006

SHEET
C–2.1

\\Dwg-server\data\SEG Projects\CURRENT PROJECTS\C15-006 Highland\Working Files\Engineering\dwg\C15-006 Utility Plan Engineering.dwg

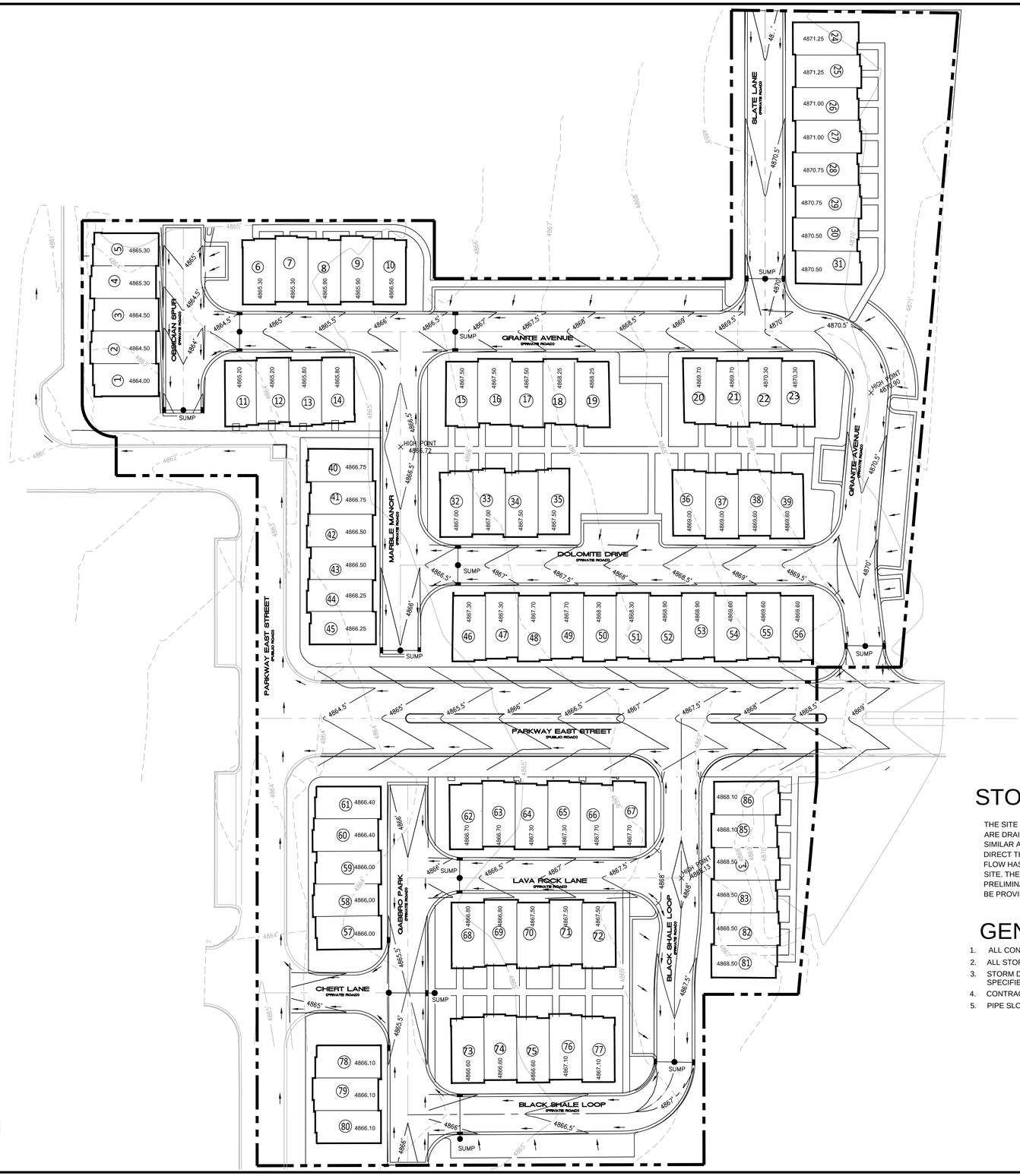

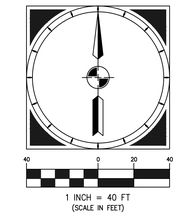

STORM DRAINAGE NARRATIVE

THE SITE IS RELATIVELY FLAT, SLOPING TOWARDS THE WEST. THE EXISTING ROADS ARE DRAINED TO INLET BOXES AND CONTROLLED BY SUMPS. THE SITE WILL FOLLOW A SIMILAR APPROACH AND COLLECT THE STORM WATER THROUGHOUT THE SITE AND DIRECT THE FLOW TO SUMPS TO PERCOLATE INTO THE GROUND. HISTORICALLY THE FLOW HAS FOLLOWED THIS SAME PATTERN OF PERCOLATING INTO THE GROUND AT THE SITE. THE NUMBER OF SUMPS SHOWN AND THE LOCATIONS FOR THE SUMPS ARE PRELIMINARY. STORM DRAIN CALCULATIONS, SUPPORTING THE SUMP LOCATIONS, WILL BE PROVIDED IN THE FINAL STORM DRAINAGE REPORT.

GENERAL NOTES:

1. ALL CONSTRUCTION TO BE DONE ACCORDING TO HIGHLAND CITY STANDARDS AND SPECIFICATIONS.
2. ALL STORM DRAIN BOXES TO BE 3'X3' INSIDE DIMENSION UNLESS OTHERWISE SPECIFIED.
3. STORM DRAIN PIPE IS 15" RPC. SLOPE FROM BOX TO BOX IS 0.2% MIN. AND SPECIFIED.
4. CONTRACTOR TO MEET ALL ADA REQUIREMENTS FOR THE SITE.
5. PIPE SLOPE FROM BOX TO SUMP IS 1.0% MIN.

Summit Engineering Group Inc.
Structural • Civil • Surveying
55 WEST CENTER • P.O. BOX 176
HEBER CITY, UTAH 84032
P: 435-654-9229 • F: 435-654-9231

6/2/2015 10:05:06 AM

REVISIONS		
	DATE	BY
1		
2		
3		
4		
5		
6		
7		
8		

CITY ENGINEER

DESIGN ENGINEER'S SEAL

PROJECT ENGINEER: BMB
PROJECT MANAGER: BMB
DRAWN BY: DJN
SCALE: 1"=40'
ISSUE DATE: 06/02/2015

PROJECT
BLACKSTONE TOWNHOMES
A RESIDENTIAL SUBDIVISION

SHEET TITLE
GRADING PLAN

PROJECT
C15-006

SHEET
C-2.2

\\Sep-server\data\SEG Projects\CURRENT PROJECTS\C15-006 Highland\Working Files\Engineering\dwg\C15-006 Grading Plan.dwg

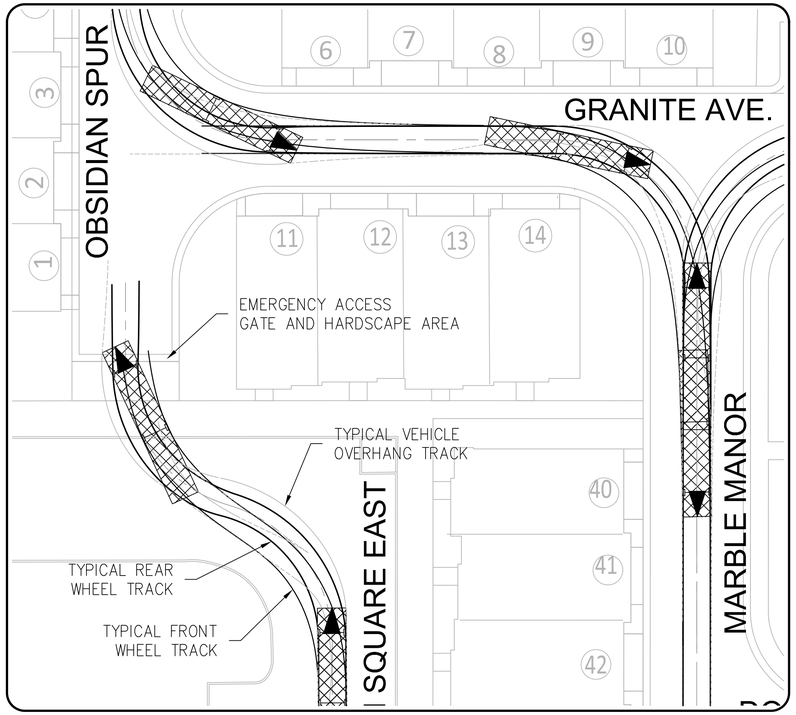

A INTERSECTION DETAIL
SCALE: 1"=20'

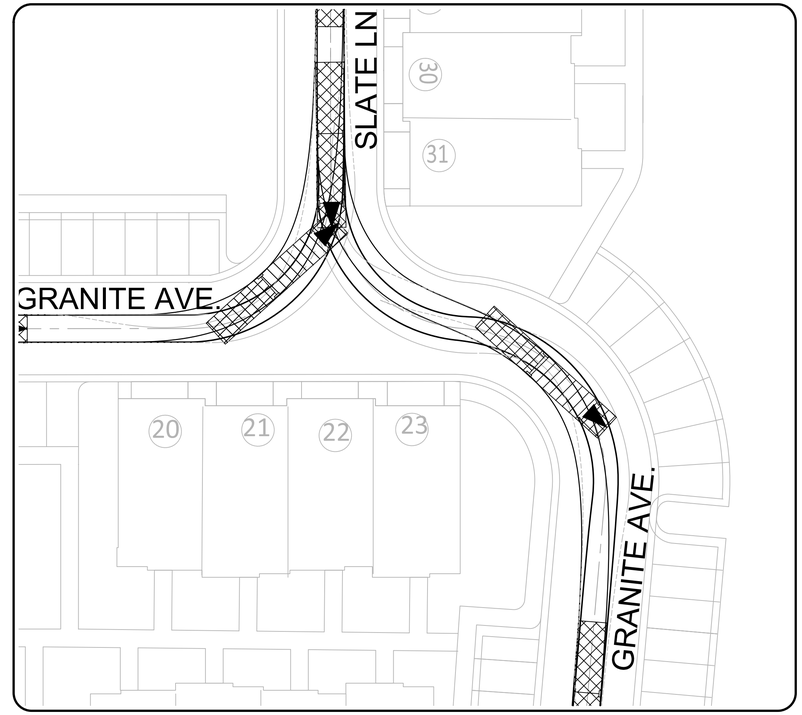

B INTERSECTION DETAIL
SCALE: 1"=20'

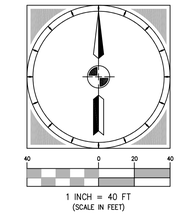

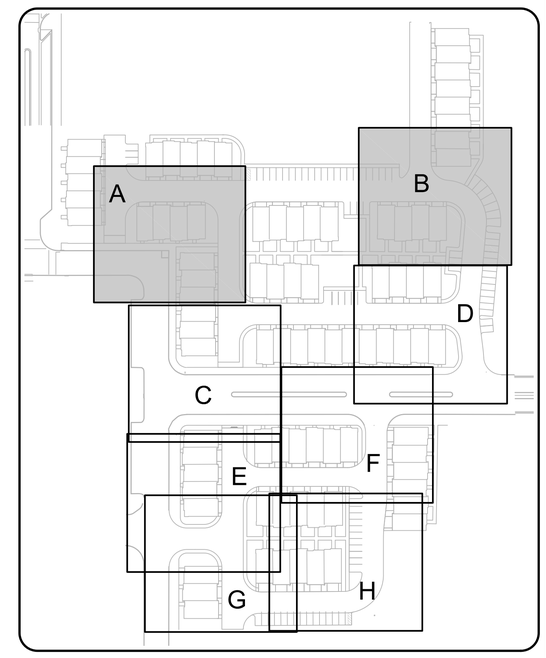

DETAIL KEY PLAN
N.T.S.

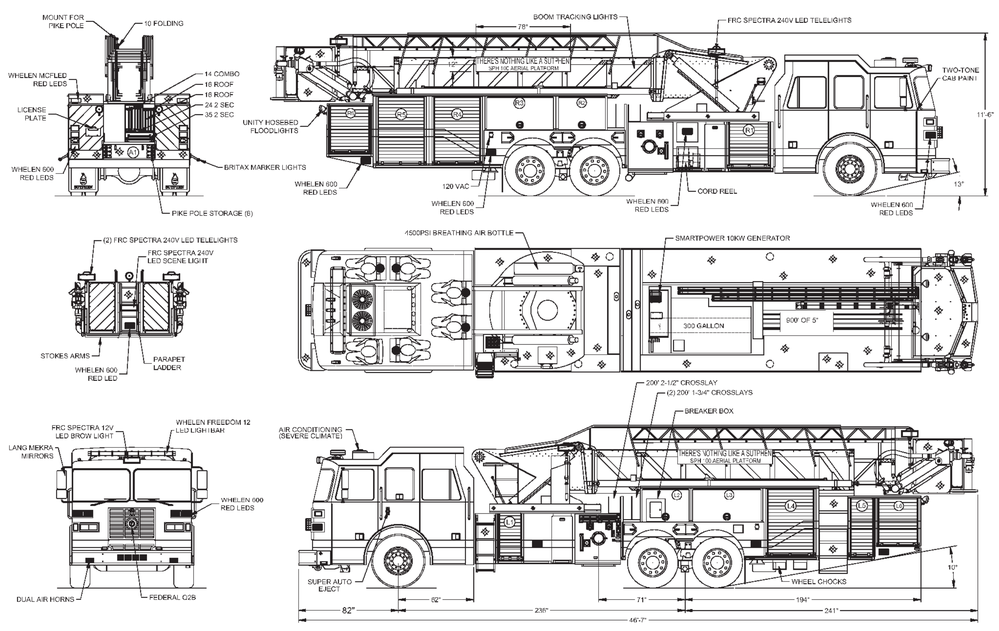

- ASSUMED FIRE TRUCK DETAILS
N.T.S.

Summit Engineering Group Inc.
Structural • Civil • Surveying
55 WEST CENTER • P.O. BOX 176
HEBER CITY, UTAH 84032
P: 435-654-9229 • F: 435-654-9231

5/19/2015 10:21:58 AM

REVISIONS		
	DATE	BY
1		
2		
3		
4		
5		
6		
7		
8		

CITY ENGINEER

DESIGN ENGINEER'S SEAL

PROJECT ENGINEER: EMB
PROJECT MANAGER: EMB
DRAWN BY: DLP
SCALE: AS SHOWN
ISSUE DATE: 6-2-2015

PROJECT
BLACKSTONE TOWNHOMES
A RESIDENTIAL SUBDIVISION

SHEET TITLE
FIRE TRUCK INGRESS AND EGRESS

PROJECT
C15-006

SHEET
C 3.1

Z:\SEG Projects\CURRENT PROJECTS\C15-006 Highland\Working Files\Engineering\dwg\C15-006 Turning Radius_A.dwg

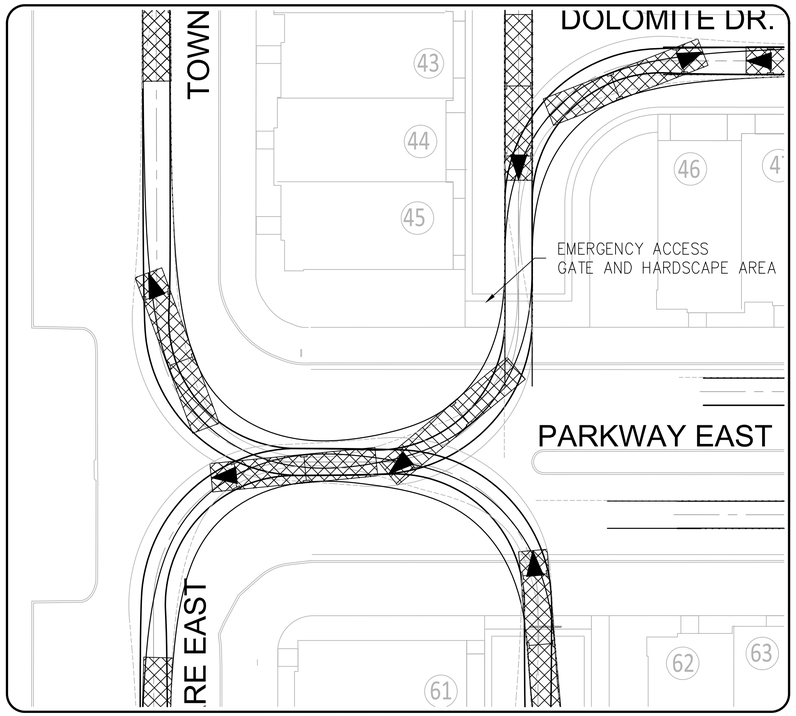

C INTERSECTION DETAIL
SCALE: 1"=20'

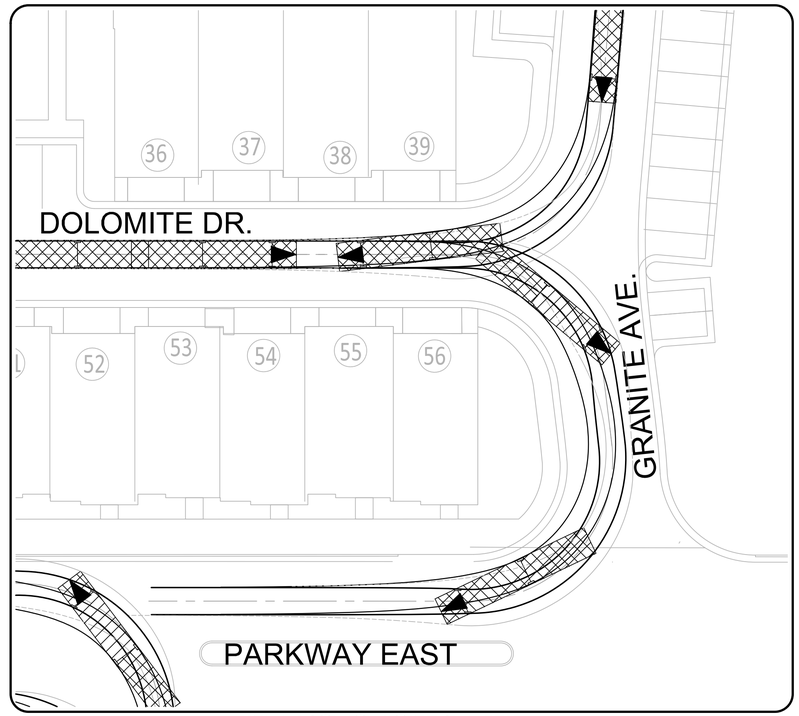

D INTERSECTION DETAIL
SCALE: 1"=20'

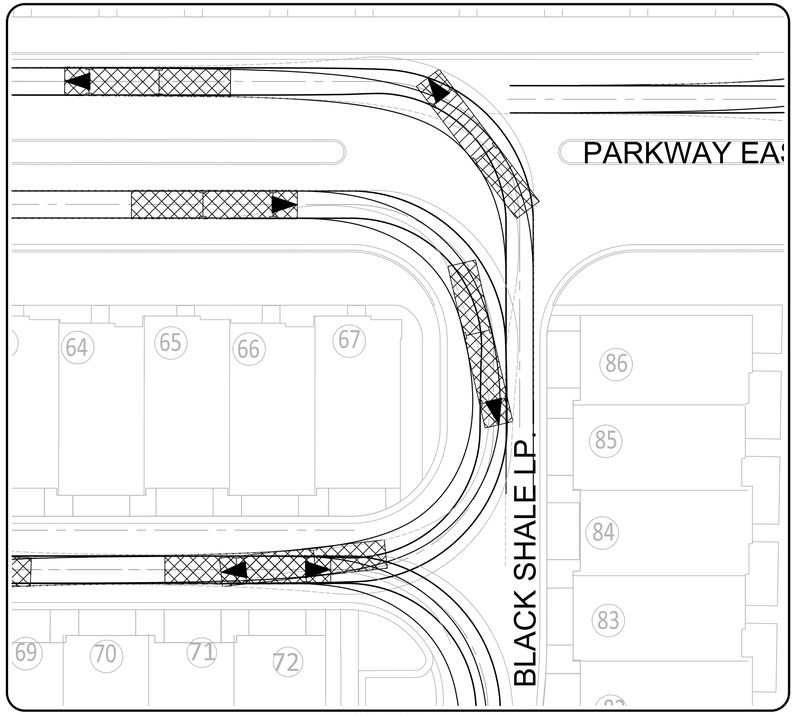

E INTERSECTION DETAIL
SCALE: 1"=20'

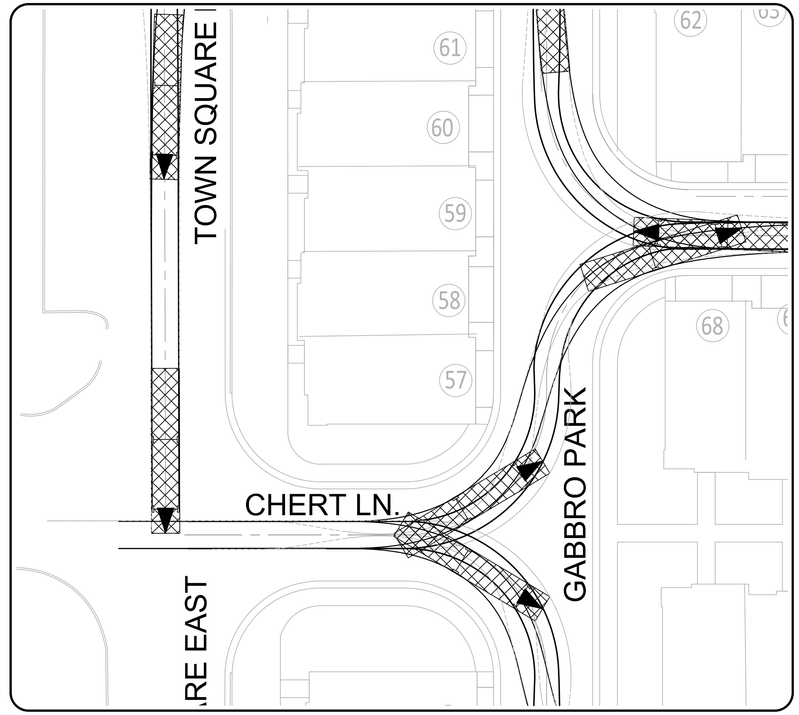

F INTERSECTION DETAIL
SCALE: 1"=20'

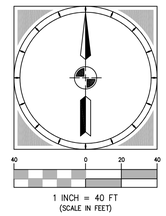

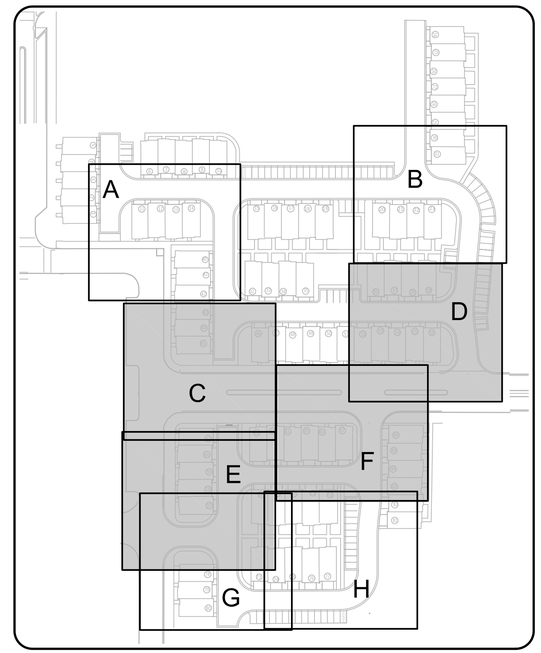

DETAIL KEY PLAN
N.T.S.

Summit Engineering Group Inc.
Structural • Civil • Surveying
55 WEST CENTER • P.O. BOX 176
HEBER CITY, UTAH 84032
P: 435-654-9229 • F: 435-654-9231

5/19/2015 10:21:58 AM

REVISIONS		
	DATE	BY
1		
2		
3		
4		
5		
6		
7		
8		

CITY ENGINEER

DESIGN ENGINEER'S SEAL

PROJECT ENGINEER: BMB
PROJECT MANAGER: BMB
DRAWN BY: DLP
SCALE: AS SHOWN
ISSUE DATE 6-2-2015

PROJECT
BLACKSTONE TOWNHOMES
A RESIDENTIAL SUBDIVISION

SHEET TITLE
FIRE TRUCK INGRESS AND EGRESS

PROJECT
C15-006

SHEET
C 3.2

Z:\SEG Projects\CURRENT PROJECTS\C15-006 Highland\Working Files\Engineering\dwg\C15-006 Turning Radius_A.dwg

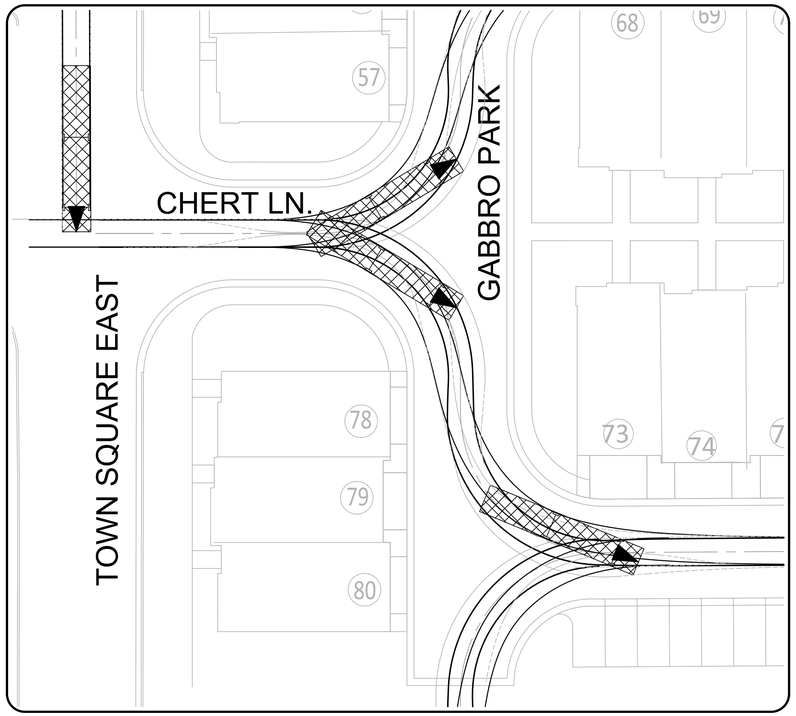

G INTERSECTION DETAIL
SCALE: 1"=20'

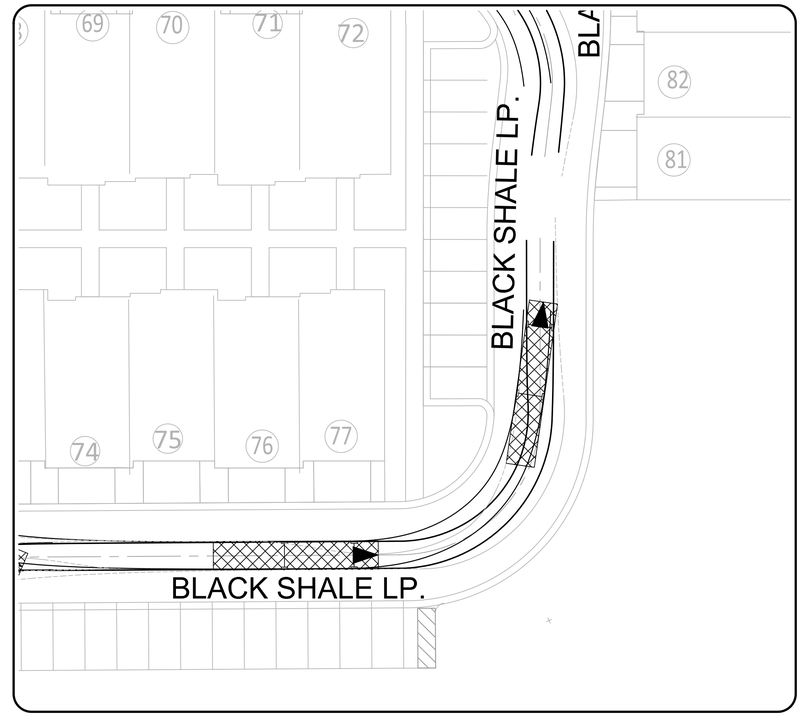

H INTERSECTION DETAIL
SCALE: 1"=20'

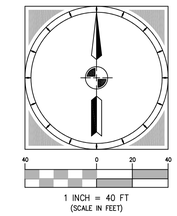

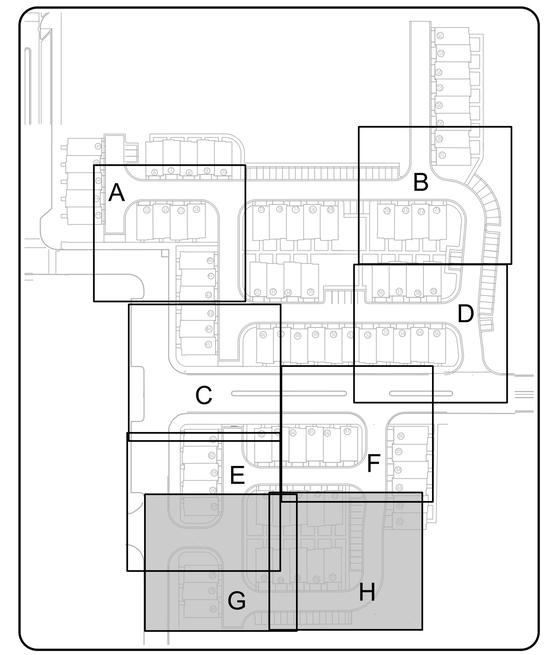

DETAIL KEY PLAN
N.T.S.

Summit Engineering Group Inc.
Structural • Civil • Surveying
55 WEST CENTER • P.O. BOX 176
HEBER CITY, UTAH 84032
P: 435-654-9229 • F: 435-654-9231

5/19/2015 10:21:58 AM

REVISIONS		
1		
2		
3		
4		
5		
6		
7		
8		
	DATE	BY

CITY ENGINEER

DESIGN ENGINEER'S SEAL

PROJECT ENGINEER: BMB
PROJECT MANAGER: BMB

DRAWN BY: DLP
SCALE: AS SHOWN
ISSUE DATE: 9-2-2015

PROJECT
BLACKSTONE TOWNHOMES
A RESIDENTIAL SUBDIVISION

SHEET TITLE
FIRE TRUCK INGRESS AND EGRESS

PROJECT
C15-006

SHEET
C 3.3

Z:\SEG Projects\CURRENT PROJECTS\C15-006 Highland\Working Files\Engineering\dwg\C15-006 Turning Radius_A.dwg

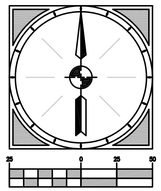

LEGEND

- Landscape Area
  81,294 SF-24% of project area
- Hardcape Area
  17,984 SF-5.3% of project area
- Driveway
- Other Hardscape Areas
- Other Sidewalks

Summit Engineering Group Inc.
Structural • Civil • Surveying
55 WEST CENTER • P.O. BOX 176
HEBER CITY, UTAH 84032
P: 435-654-9229 • F: 435-654-9231

6/2/2015 11:22:51 AM

REVISIONS	DATE	BY
1		
2		
3		
4		
5		
6		
7		
8		

CITY ENGINEER

DESIGN ENGINEER'S SEAL

PROJECT ENGINEER: BMB
PROJECT MANAGER: BMB
DRAWN BY: SCS
SCALE: AS SHOWN
ISSUE DATE: 6-2-15

PROJECT
BLACKSTONE PROJECT

SHEET TITLE
LANDSCAPE CALCULATIONS

PROJECT
C15-006

SHEET
C-4

\\Sdg-server\data\SDG Projects\CURRENT PROJECTS\C15-006 Highland\Working Files\Planning\dwg\C15-006 Base Map.dwg

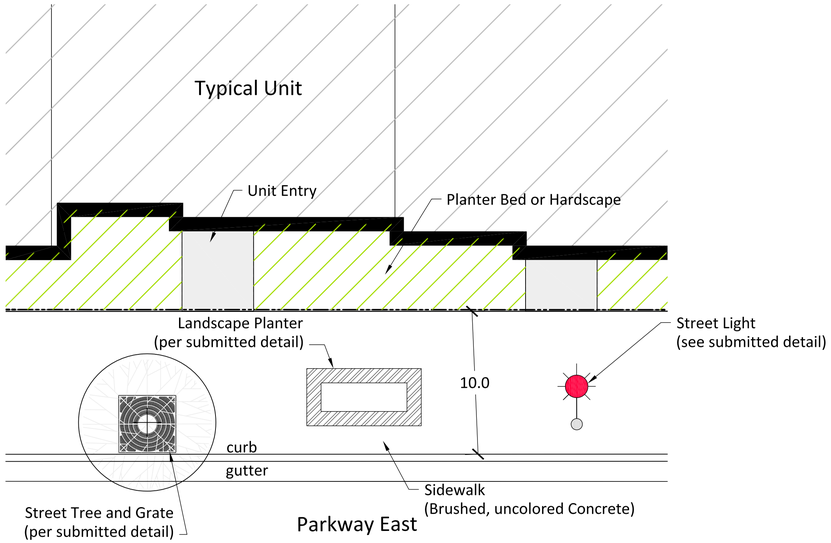

Sidewalk Plan View

1"=5'

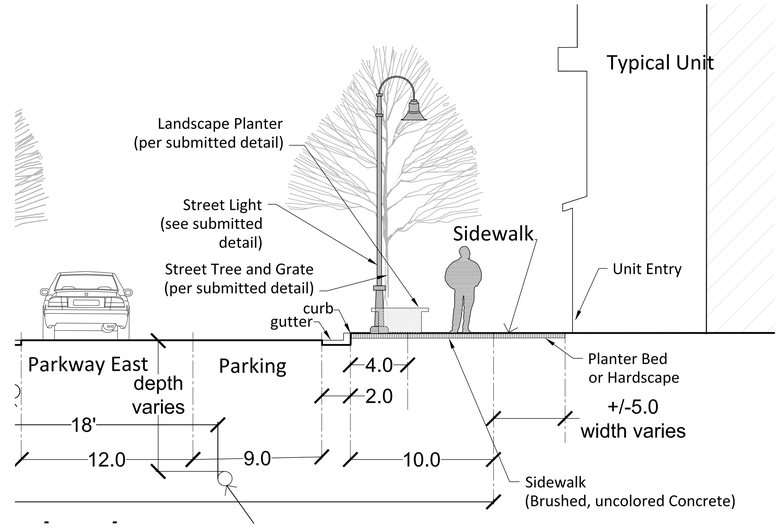

Sidewalk Section

1"=5'

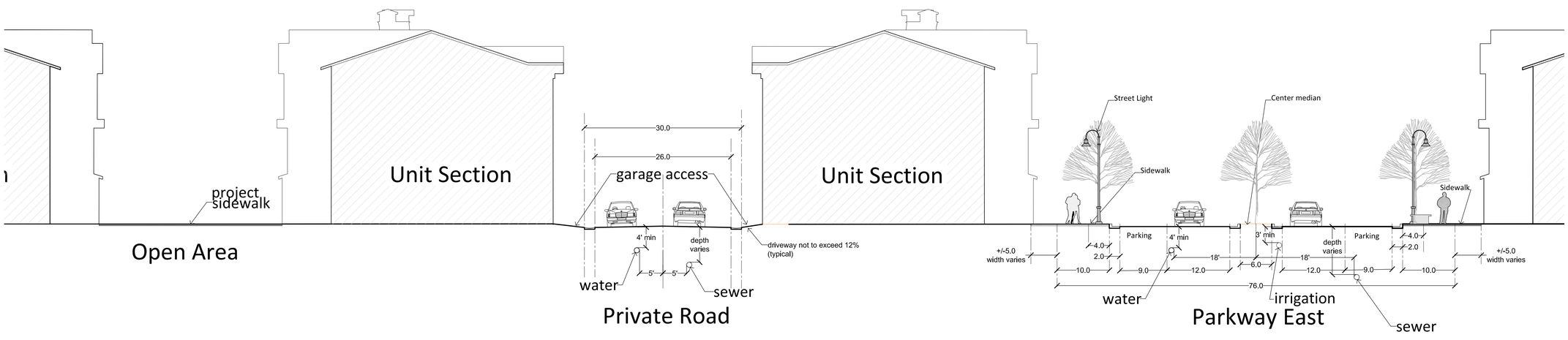

Section A-A'

1"=10'

Summit Engineering Group Inc.
Structural • Civil • Surveying

REVISIONS		
	DATE	BY
1		
2		
3		
4		
5		
6		
7		
8		

CITY ENGINEER

DESIGN ENGINEER'S SEAL

PROJECT ENGINEER: EMB
PROJECT MANAGER: EMB
DRAWN BY: SCS
SCALE: AS SHOWN
ISSUE DATE: 6-2-15

PROJECT: BLACKSTONE PROJECT

SHEET TITLE: ROAD SECTIONS

PROJECT: C15-006

SHEET: C-5

6/2/2015 11:28:39 AM

\\Sdg-server\acad\SDG Projects\CURRENT PROJECTS\C15-006 Highland\Working Files\Phoenix\dwg\C15-006 Base Map.dwg

Window Schedule							
NUMBER	WIDTH	HEIGHT	FRAME	GLAZING	DESCRIPTION	COUNT
A	3' - 0"	6' - 0"	VINYL	LOW-E	INSULATED, WHITE, CLEAR	11
B	3' - 0"	4' - 0"	VINYL	LOW-E	INSULATED, WHITE, CLEAR	6
C	3' - 0"	3' - 0"	VINYL	LOW-E	INSULATED, WHITE, CLEAR	6
D	2' - 0"	4' - 0"	VINYL	LOW-E	INSULATED, WHITE, CLEAR	5
E	3' - 0"	6' - 0"	VINYL	LOW-E	INSULATED, WHITE, CLEAR	10
F	4' - 0"	5' - 0"	VINYL	LOW-E	INSULATED, WHITE, CLEAR	16
G	4' - 0"	6' - 0"	VINYL	LOW-E	INSULATED, WHITE, CLEAR	2
H	1' - 0"	3' - 0"	VINYL	LOW-E	INSULATED, WHITE, CLEAR	6
I	5' - 0"	5' - 0"	VINYL	LOW-E	INSULATED, WHITE, CLEAR	1
J	4' - 0"	4' - 0"	VINYL	LOW-E	INSULATED, WHITE, CLEAR	4
K	3' - 0"	5' - 0"	VINYL	LOW-E	INSULATED, WHITE, CLEAR	2
L	3' - 0"	5' - 0"	VINYL	LOW-E	INSULATED, WHITE, CLEAR	1
M	2' - 0"	2' - 0"	VINYL	LOW-E	INSULATED, WHITE, CLEAR	1
Grand total						71

Door Schedule								
NUMBER	WIDTH	HEIGHT	THICKNESS	JAMB	MATERIAL	HARDWARE	DESCRIPTION	COUNT
01	3' - 6"	8' - 0"	0' - 2"	FIR	WOOD	LOCK & DEAD BOLT	INSULATED COLONIAL	1
02	2' - 8"	6' - 8"	0' - 1 1/2"	FIR	WOOD	LOCK & DEAD BOLT	INSULATED COLONIAL	1
03	3' - 0"	6' - 8"	0' - 1 1/2"	FIR	WOOD	KNOB	COLONIAL	2
03	6' - 0"	7' - 8"	0' - 1 1/2"	FIR	GLASS	LOCK & DEAD BOLT	INSULATED GLASS	1
04	2' - 8"	6' - 8"	0' - 1 1/2"	FIR	WOOD	KNOB	COLONIAL	3
05	2' - 6"	6' - 8"	0' - 1 1/2"	FIR	WOOD	KNOB	COLONIAL	4
06	2' - 4"	6' - 8"	0' - 1 1/2"	FIR	WOOD	KNOB	COLONIAL	7
07	1' - 4"	6' - 8"	0' - 1 1/2"	FIR	WOOD	KNOB	COLONIAL	1
08	4' - 0"	6' - 8"	0' - 1 1/2"	FIR	WOOD	KNOB	DOUBLE PANEL	1
09	5' - 0"	6' - 8"	0' - 1 1/2"	FIR	WOOD	KNOB	DOUBLE PANEL	5
10	2' - 8"	6' - 8"	0' - 1 1/2"	FIR	WOOD	LOCK & DEAD BOLT	GARAGE DOOR	1
11	16' - 0"	8' - 0"	0' - 1 1/2"	FIR	METAL	LOCK	GARAGE ROLL UP	1
Grand total								28

NOTE:
A BACK WATER VALVE IS REQUIRED TO PROTECT PLUMBING FIXTURES THAT ARE LOCATED BELOW THE ELEVATION LEVEL OF THE NEAREST UPSTREAM MAN HOLE COVER. FIXTURES THAT ARE ABOVE THE ELEVATION OF THE MAN HOLE COVER SHALL NOT DISCHARGE THROUGH THE BACK WATER VALVE

NOTE:
FLOOR DRAINS MUST HAVE TRAP PRIMERS OR DEEP SEAL TRAPS

NOTE:
MAIN LEVEL WINDOW'S HEAD HEIGHT @ 7'-8" UNO

NOTE:
UPPER LEVEL WINDOW SILLS TO BE A MIN. OF 24" ABOVE FLOOR

NOTE:
HOMEOWNER TO MEET WITH BUILDER & TRUSS COMPANY TO DISCUSS VAULTED/TREY/COFFERED CEILING OPTIONS

NOTE:
8' TALL WALLS FRAMED WITH STUDS @ 16" O.C.
10' AND TALLER WALLS SEE ENGINEERING.

DIMENSIONS ON FLOOR PLANS ARE TO ROUGH FRAMING UNLESS OTHERWISE NOTED.

2 X 4 STUD WALLS ASSUMED TO BE 3 1/2" WIDE.

2 X 6 STUD WALLS ASSUMED TO BE 5 1/2" WIDE.

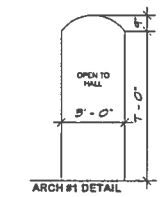

ARCH #1 DETAIL

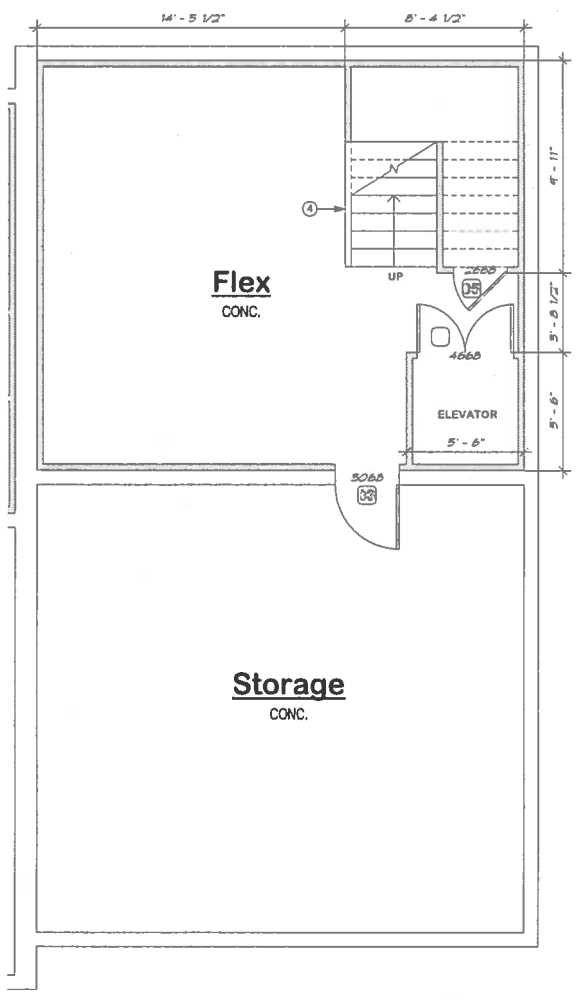

PRE-CAST LEVEL

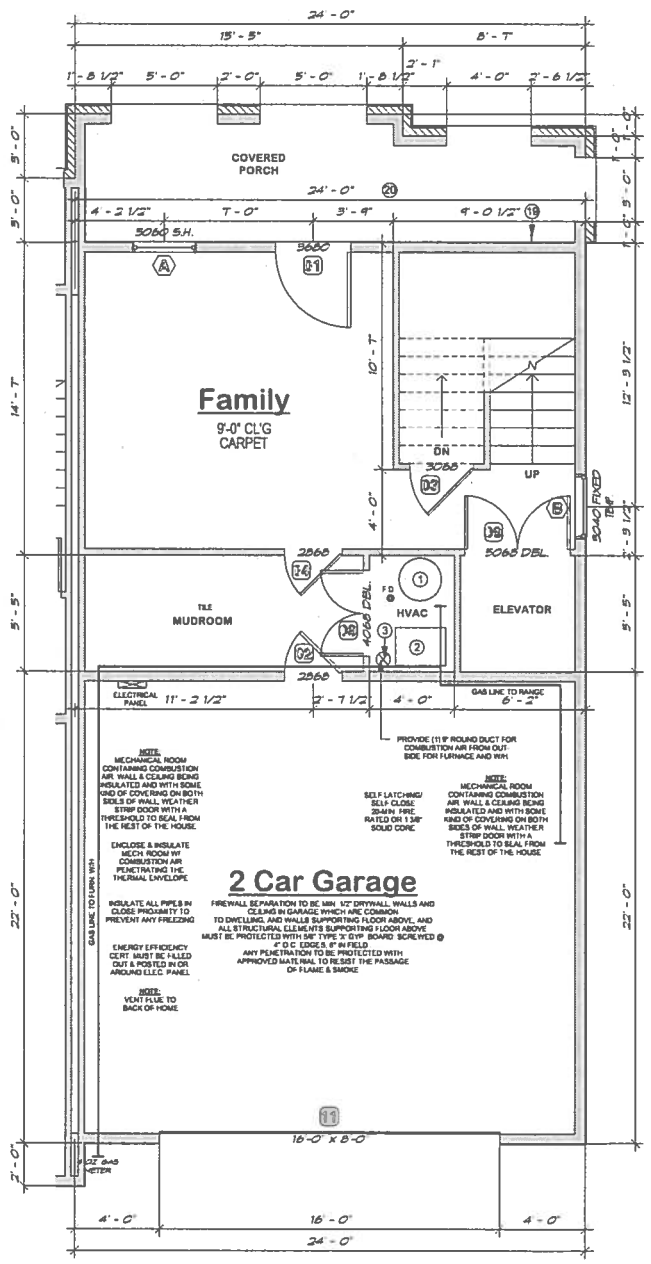

GROUND LEVEL

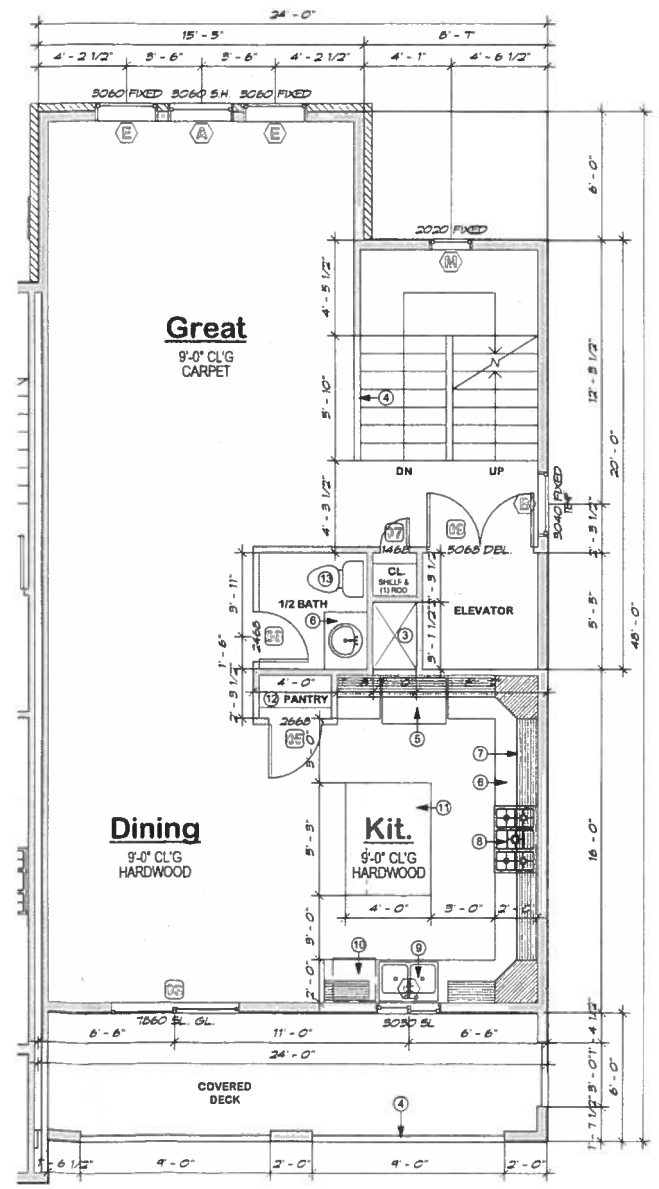

MAIN LEVEL

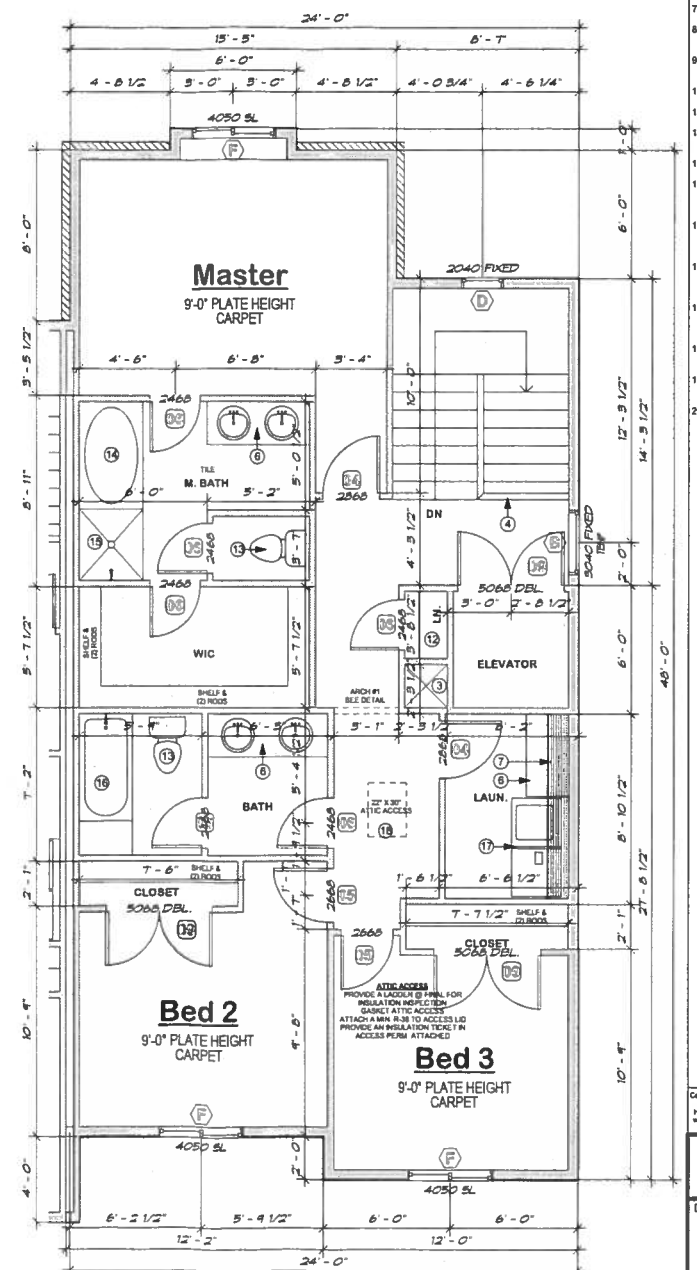

UPPER LEVEL

FLOOR PLANS

WALKER HOME DESIGN
801-930-9499 office
www.walkerhomedesign.com

KEYNOTES

1. (1) 50 GALLON GAS WATER HEATERS W/ EXPANSION TANK, 40,000 BTUS (WITH SESSMIC HOLDOWNS PLACED A 3RD WAY UP & A 3RD DOWN) (WITH ONE WAY CHECK HEAT VALVES) (1/2" FOAM INS. AT HOT WATER LINES)
2. (1)90% EFFICIENCY CLASS FURNACES 100,000 BTUS (i.e. TEMPSTAR NUG5100 DFA)
3. FLUE CHASE
4. GUARD RAILING
5. 36" WIDE REFRIGERATOR SPACE (WITH INSTALLED WATER LINE)
6. GRANITE COUNTERTOP ON BASE CABINET
7. UPPER CABINETS (TOP @ 7'-0")
8. 36" WIDE RANGE COOK-TOP W/ RANGE HOOD ABOVE
9. DOUBLE SINK W/ DISPOSAL AND SPRAYER
10. DISHWASHER
11. ISLAND SNACK BAR
12. (5) 16" SHELVES STARTING @ 24" ABOVE FINISHED FLOOR
13. 1.6 GALLON PER FLUSH TOILET
14. 44" X 60" JETTED TUB W/ DURA-CRETE BACKER BOARD W/ MIN. 18" X 18" ACCESS@FRONT
15. 36" X 48" WALK-IN TILE SHOWER W/ (2) 2.5 GPM SHOWER HEADS W/ DURA-CRETE BACKER BOARD
16. 30" X 60" TUB/SHOWER W/ 2.5 GPM SHOWER HEAD W/ DURA-CRETE BACKER BOARD
17. WASHER/DRYER SPACE (VENT DRYER TO EXTERIOR W/ 4" VENT)
18. 22" X 30" ATTIC ACCESS w/LOCKING LATCH
19. HOSE B/B W/ SHUT-OFF BALL VALVE (FREEZE PROTECTED)
20. CONC. LANDING @ MIN. 36" X 36"

Blackstone
6 Unit Townhomes

Designed for
Blackstone Group

Finished Footage	2,285
Date	OCT. 2014
Drawn by	DSW
PRINTED 5/28/2015 12:27:18 PM	PRE-CAST 473 FLEX. 449 GROUND LEVEL 491 MAIN LEVEL 867 UPPER LEVEL 927 TOTAL 3,207
Sheet 4 of 12	
SCALE:	1/4" = 1'-0"

6 UNIT RIGHT ELEVATION

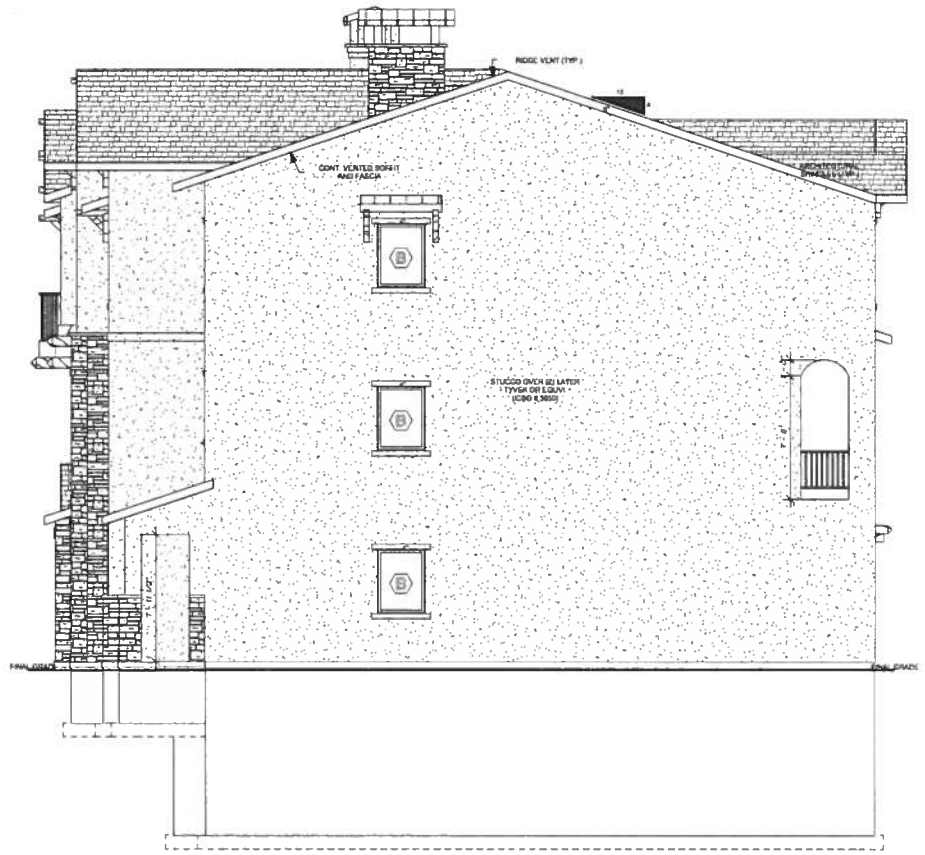

NOTE:
GROUND LEVEL WINDOW'S HEAD HEIGHT @ 7'-8" UNO

NOTE:
MAIN LEVEL WINDOW'S HEAD HEIGHT @ 7'-8" UNO

NOTE:
UPPER LEVEL WINDOW SILLS TO BE A MIN. OF 24" ABOVE FLOOR

NOTE:
INSPECTIONS ARE REQUIRED FOR ALL STUCCO & EIFS SYSTEMS

NOTE:
NO MECHANICAL VENTS ON FRONT OF HOME

6 UNIT FRONT ELEVATION

WALKER HOME DESIGN
801-930-9499 office
www.walkerhomedesign.com

KEYNOTES

Blackstone
6 Unit Townhomes

Designed for
Blackstone Group

Finished Footage	2,285
Date	OCT. 2014
Drawn by	DSW
PRINTED 5/29/2015 12:27:12 PM	PRE-CAST: 473
Sheet 5 of 12	FLEX: 449
	GROUND LEVEL: 491
	MAIN LEVEL: 867
	UPPER LEVEL: 927
	TOTAL: 3,207

SCALE: 3/16" = 1'-0"

6 UNIT LEFT ELEVATION

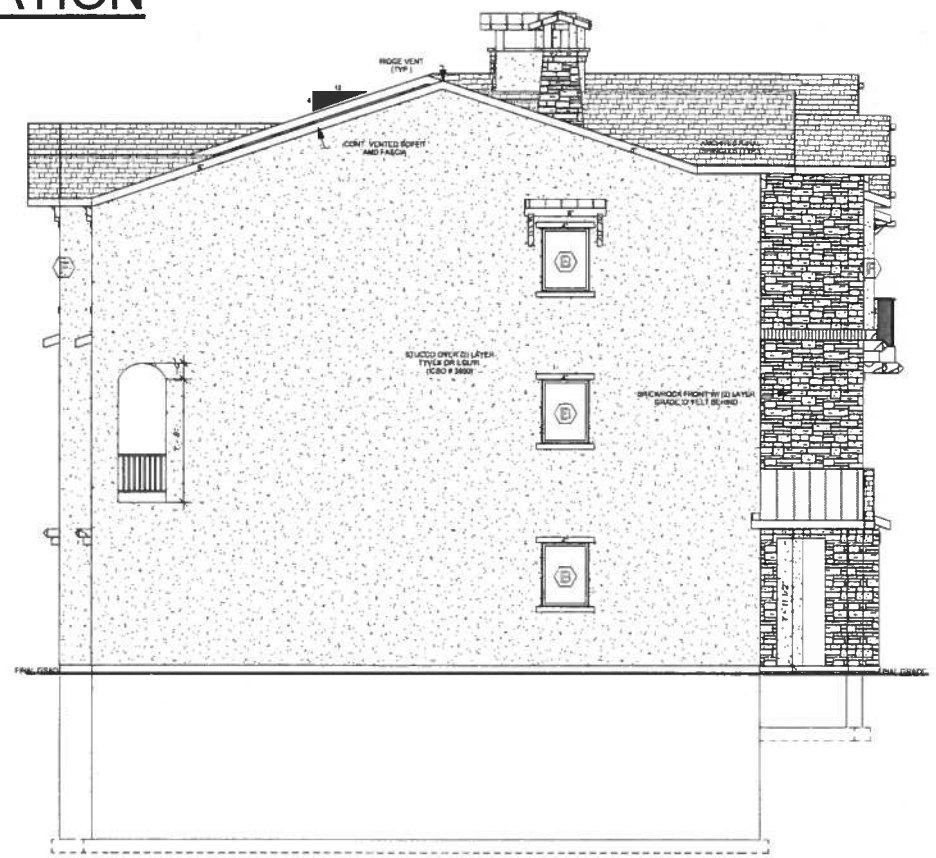

NOTE:
GROUND LEVEL WINDOW'S HEAD HEIGHT @ 7'-8" UNO

NOTE:
MAIN LEVEL WINDOW'S HEAD HEIGHT @ 7'-8" UNO

NOTE:
UPPER LEVEL WINDOW SILLS TO BE A MIN. OF 24" ABOVE FLOOR

NOTE:
INSPECTIONS ARE REQUIRED FOR ALL STUCCO & EIFS SYSTEMS

NOTE:
NO MECHANICAL VENTS ON FRONT OF HOME

6 UNIT REAR ELEVATION

WALKER HOME DESIGN
801-930-9499 office
www.walkerhomedesign.com

KEYNOTES

Blackstone
6 Unit Townhomes

Designed for
Blackstone Group

Finished Footage	2,285
Date	OCT. 2014
Drawn by	DSW
PRINTED 5/28/2015 12:27:14 PM	PRE-CAST: 473
	FLEX: 449
Sheet 6 of 12	GROUND LEVEL: 491
	MAIN LEVEL: 867
	UPPER LEVEL: 927
	TOTAL: 3,207
SCALE:	3/16" = 1'-0"

SHADE TREES

SYMBOL	BOT. NAME/COMMON NAME	QTY.	SIZE
	ACER X FREEMANII 'Jeffers Red' AUTUMN BLAZE MAPLE		2" CALIPER
	PYRUS CALLERYANA 'Chanticleer' Chanticleer Pear Tree		2" CALIPER

ORNAMENTAL TREES

SYMBOL	BOT. NAME/COMMON NAME	QTY.	SIZE
	MALUS 'Spring Snow' SPRING SNOW CRABAPPLE		2" CALIPER
	TILIA AMERICANA 'Redmond' REDMOND LINDEN		2" CALIPER

EVERGREEN TREES

SYMBOL	BOT. NAME/COMMON NAME	QTY.	SIZE
	PINUS LEUCODERMIS BOSNIAN PINE		5'-6'

LARGE SHRUBS

FORSYTHIA X NORTHERN GOLD - NORTHERN GOLD FORSYTHIA
EUONYMUS ALATUS COMPACTA - DWARF BURNING BUSH
PRUNUS CISTENA - PURPLE SANDCHERRY
CORNUS ALBA ELEGANTISSIMA - VARIEGATED DOGWOOD

MEDIUM SHRUBS

BERBERIS THUNBERGII 'Crimson Pygmy' - CRIMSON PYGMY BARBERRY
CALAMAGROSTIS ACUTIFOILA 'Karl Foester' - FEATHER KARL FOESTER

SMALL SHRUBS/PERENNIALS

HEMEROCALLIS 'Stella d' oro' - STELLA D ORO DAYLILY
ECHINACEA PURPUREA - PURPLE CONE FLOWER

LANDSCAPE NOTES

1. ALL PLANTER AREAS SHALL HAVE A MIN. 3" DEPTH OF SHREDDED BARK MULCH OR MIN. 3" DEPTH OF 1" SIZE SCREENED GRAVEL.
2. SITE SHALL HAVE OVERHEAD SPRAY IRRIGATION IN ALL TURF AREAS AND DRIP IRRIGATION IN ALL PLANTER AREAS.
3. CONTRACTOR SHALL SELECT PLANTS FROM LEGENDS ABOVE AND ENSURE THAT SELECTED PLANTS ARE PLACED IN APPROPRIATE LOCATIONS KEEPING IN MIND SUN AND SHADE REQUIREMENTS.
4. ALL GROUPS OF PLANTS SHALL BE THE SAME PLANT. PLANT IN GROUPS OF 3 OR MORE.

0' 5' 15' 30' 60'

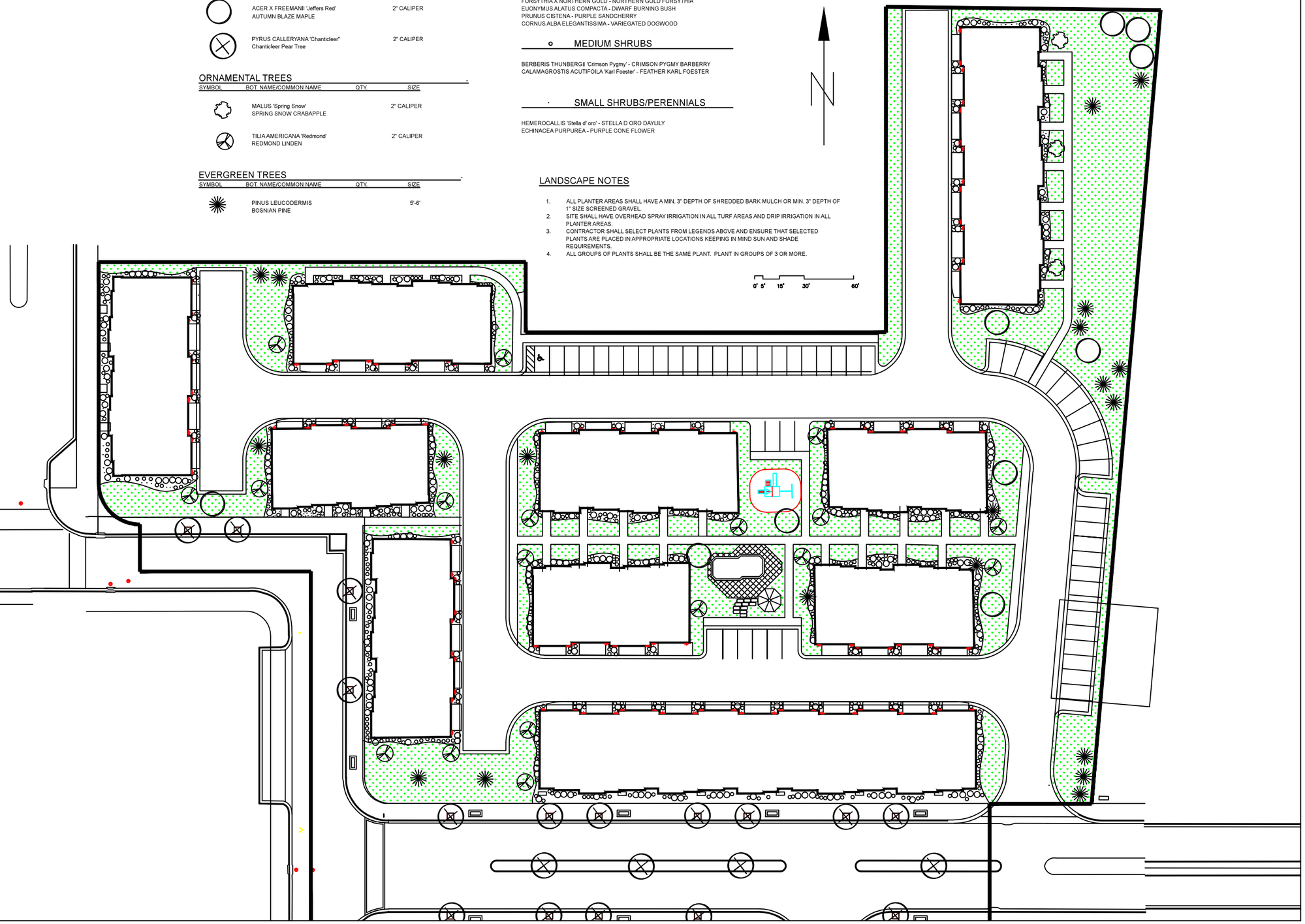

CLS - Community Landscape Services

Danny Knighton
Landscape Designer
May 29, 2015

Blackstone
Highland, Utah

Landscape Plan
Scale = 1":60'-0"

Page:
LP-01

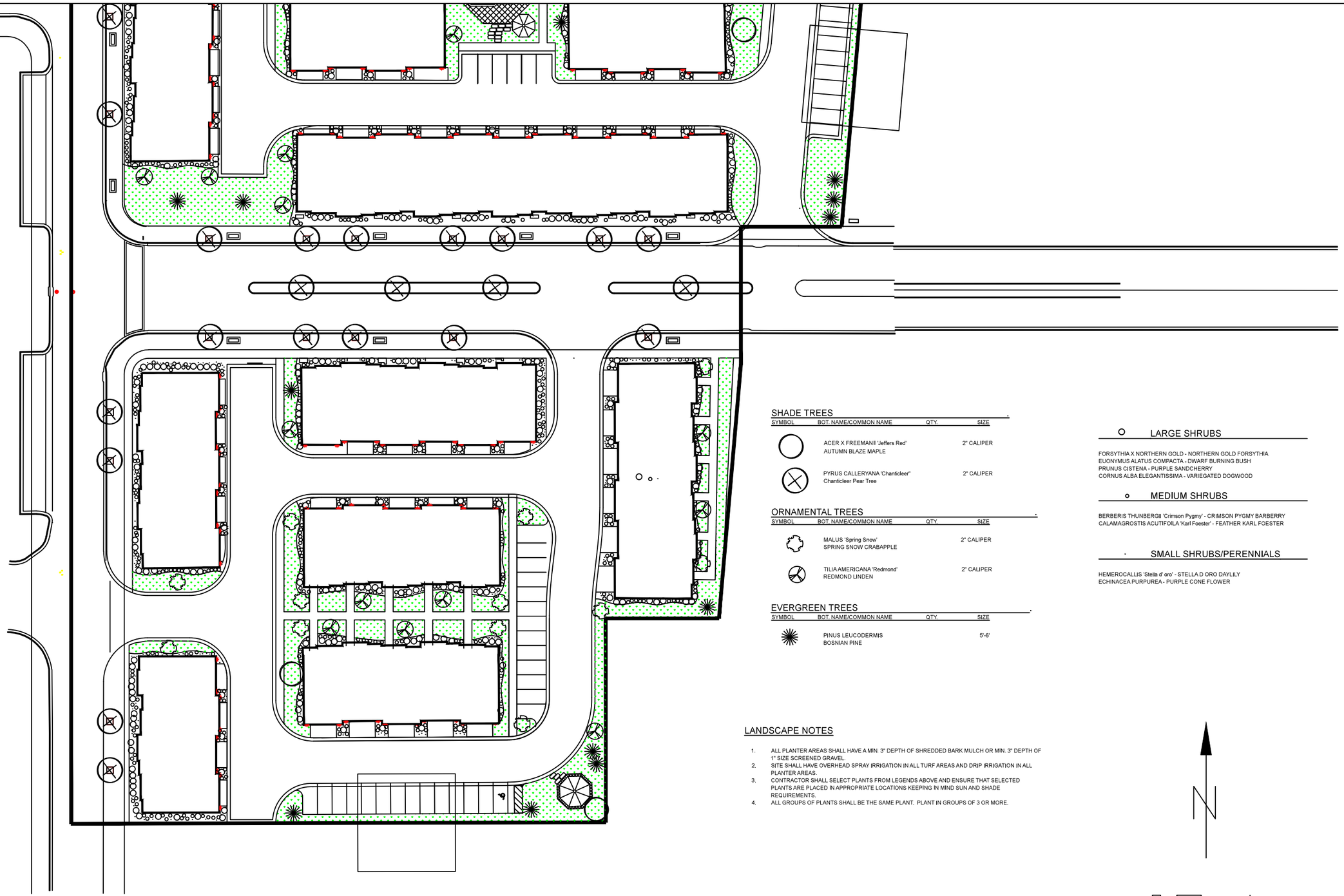

SHADE TREES

SYMBOL	BOT. NAME/COMMON NAME	QTY.	SIZE
	ACER X FREEMANII 'Jeffers Red' AUTUMN BLAZE MAPLE		2" CALIPER
	PYRUS CALLERYANA 'Chanticleer" Chanticleer Pear Tree		2" CALIPER

ORNAMENTAL TREES

SYMBOL	BOT. NAME/COMMON NAME	QTY.	SIZE
	MALUS 'Spring Snow' SPRING SNOW CRABAPPLE		2" CALIPER
	TILIA AMERICANA 'Redmond' REDMOND LINDEN		2" CALIPER

EVERGREEN TREES

SYMBOL	BOT. NAME/COMMON NAME	QTY.	SIZE
	PINUS LEUCODERMIS BOSNIAN PINE		5'-6'

LARGE SHRUBS

FORSYTHIA X NORTHERN GOLD - NORTHERN GOLD FORSYTHIA
EUONYMUS ALATUS COMPACTA - DWARF BURNING BUSH
PRUNUS CISTENA - PURPLE SANDCHERRY
CORNUS ALBA ELEGANTISSIMA - VARIEGATED DOGWOOD

MEDIUM SHRUBS

BERBERIS THUNBERGII 'Crimson Pygmy' - CRIMSON PYGMY BARBERRY
CALAMAGROSTIS ACUTIFOILA 'Karl Foester' - FEATHER KARL FOESTER

SMALL SHRUBS/PERENNIALS

HEMEROCALLIS 'Stella d' oro' - STELLA D ORO DAYLILY
ECHINACEA PURPUREA - PURPLE CONE FLOWER

LANDSCAPE NOTES

1. ALL PLANTER AREAS SHALL HAVE A MIN. 3" DEPTH OF SHREDDED BARK MULCH OR MIN. 3" DEPTH OF 1" SIZE SCREENED GRAVEL.
2. SITE SHALL HAVE OVERHEAD SPRAY IRRIGATION IN ALL TURF AREAS AND DRIP IRRIGATION IN ALL PLANTER AREAS.
3. CONTRACTOR SHALL SELECT PLANTS FROM LEGENDS ABOVE AND ENSURE THAT SELECTED PLANTS ARE PLACED IN APPROPRIATE LOCATIONS KEEPING IN MIND SUN AND SHADE REQUIREMENTS.
4. ALL GROUPS OF PLANTS SHALL BE THE SAME PLANT. PLANT IN GROUPS OF 3 OR MORE.

0' 5' 15' 30' 60'

CLS - Community Landscape Services
Danny Knighton
Landscape Designer
May 29, 2015

Blackstone
Highland, Utah

Landscape Plan
Scale = 1":60'-0"

Page:
LP-02

6/18/15

Summary of Neighborhood Meeting held at the Community Center on 6/18/15 at 6:30 PM.

Tim Aalders, Matt Robinson, Aise Allart, and Al Rafati from Holt Development Group were at the community center at 6:15 P.M.

At 6:35 the first neighbors started showing up to the meeting. Tim started the meeting by handing out architectural drawings and site plans to the neighbors. Tim explained that that we are building 86 townhomes in the Highland Town Center. We walked the neighbors through the site plan pointing out amenities, parking, access points, etc. We went through the architectural drawings showing the quality of the townhomes. Tim invited everyone there to come see our parade homes in Lehi, so they can see the quality of our homes.

One gentleman came to the meeting because he owned multiple rentals in Toscana. He asked us if we were going to compete with Toscana and have rentals. Matt Robinson explained to him that our townhomes are not going to be rentals. We designed the units to be larger and nicer than Toscana. At the $290,000 – $340,000 price range, rentals don't make a lot of sense. He left after we answered his question.

There were only two neighbors who had concerns at the meeting Kathy and Willard and Lujeanne Spykes.

Kathy over the course of an hour asked multiple questions.

She was concerned that these units are 3 stories and block views.

Tim responded that the townhomes are designed within the Town Center Code.

She raised concerns about the parking situation.

Tim responded that Toscana's parking ratio was 2.2 parking spots per unit. Tim explained that we raised our parking ratio to 3 to help alleviate the parking situation. Tim explained that we are in compliance with the code. We explained that the city does not want driveways, or people parking in the driveways.

She raised concerns that no one would want to buy these townhomes.

Tim respectfully disagreed. Tim stated that if they don't sell, then Kathy will get to enjoy the open field for longer than expected. Even if they don't sell fast, everyone is better off because we are paving the dirt road.

She raised concerns about these townhomes being rentals.

We explained that we are not planning on using the townhomes as rentals.

She raised concerns about the amount of open space

Kathy wanted us to build cottages like the ones she lives in. We explained that the cost of land is so expensive that it is not financially feasible to build cottages. Tim explained that he has lived in Highland of 19 years. It is very important to him to design a project that makes Highland a better place to live and makes him proud. He explained that we didn't push for max density. We could have tried to squeeze 10-20 more townhomes on the property. He explained that the townhomes will be very high quality with elevators, media rooms, granite, 3 tone paint, custom cabinets, etc.

Tim also explained that Holt Development Group is designing a community for some of the older members of Highland where they can sell their large house on a large lot and still live in Highland. It's a place where they can live in a nice 3,200 sq. foot town home in Highland for around $300,000. They will no longer have to take care of a large yard.

She raised the concern about townhomes being built in the town center

We explained that we in compliance with all the zoning codes. We are not asking for any exceptions to the code. She then went on to explain that there is another developer who is looking into building a 4 story assisted living community in the town center. She said the developer is looking to get permission to build 4 stories by building the city a library. She explained how angry this made her and that she would fight it.

Willard and Lujeanne Willard were the other neighbors to raise a concern. Their first concern was a rod iron fence. They were nervous that kids could reach through the rod iron fence to feed her horses. She was also concerned by the fact that they still flood irrigate their land and want to make sure that they don't flood the townhomes. They were angry at the city because the city forced them to do a bunch of work on their property that was not necessary.

We finished around 7:30 and thanked everyone for coming.

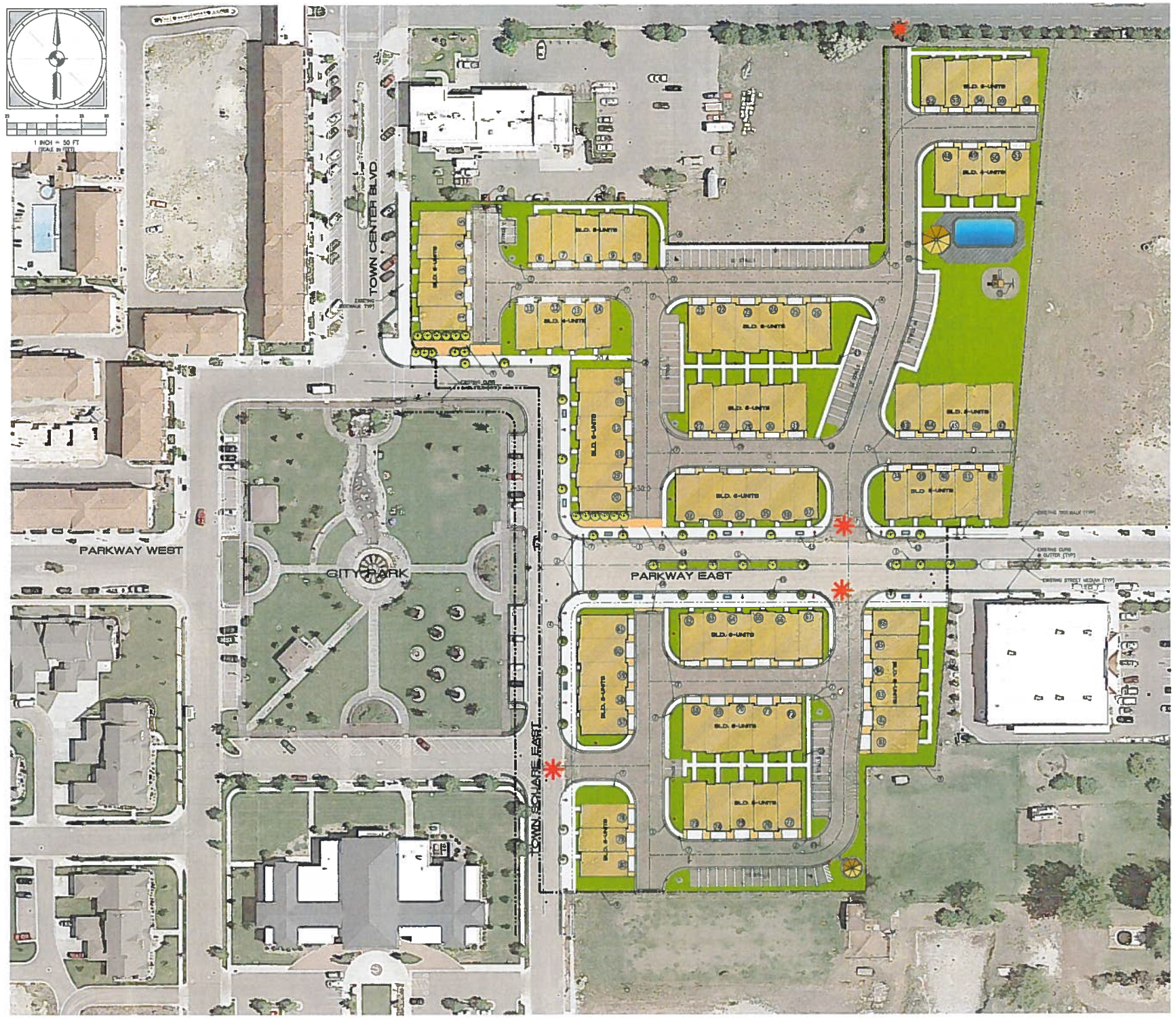

LEGEND

1. LANDSCAPED STREET MEDIAN
2. ADA RAMP
3. ACCESS GATE IN EXTERIOR FENCING
4. NEW SIDEWALK
5. PASEO/ PLAZA AREAS-SEE SITE PLAN DETAIL SHEET
6. GAZEBO/ GRILL AREA
7. STOP/ STREET SIGN
8. EXISTING 5' WIDE SIDEWALK TO BE UPGRADED TO A 15' WIDE SIDEWALK
9. WROUGHT IRON FENCING-SEE DETAIL SHEETS
10. FIRE ACCESS
11. LANDSCAPE PLANTER
12. CROSSWALK
13. POLE LIGHT-SEE LIGHTING SITE PLAN
14. STREET LIGHT-SEE LIGHTING SITE PLAN
15. STREET TREE AND GRATE-SEE DETAIL SHEETS
16. BIKE RACK-SEE DETAIL SHEETS
17. HIGH BACK CURB AND GUTTER
18. ROLLED GUTTER (All private roads)
19. CONCRETE DRIVEWAY
20. COMMUNITY FACILITY AREA
21. CHILDREN'S PLAY AREA
22. DOG WASTE STATION
23. MAIL BOXES

JURISDICTION

LEGAL JURISDICTION:	HIGHLAND CITY
DISTRICT/ PLANING ZONE:	TOWN CENTER FLEX USE

AREA TABULATIONS

	AREA	% of total
TOTAL AREA:	7.76 acres	100%
BUILDING(S) AREA:	2.45 acres (107,136 sf)	32%
LANDSCAPE:	1.21 acres (52,793 sf)	15.6%
HARDSCAPE:	0.4 acres (18,955 sf)	5%
ROADS:	1.9 acres (82,764 sf)	23%

PARKING TABULATIONS

TOTAL UNITS:	86
ON SITE PARKING PROVIDED:	172 GARAGE
	86 STALLS
	258 TOTAL ON SITE
	(3.0 SPACES/ UNIT)

ACCESSIBILITY

ALL UNITS TO OFFER ELEVATORS FOR HANDICAPPED ACCESS

* Project access point-full access

Summit Engineering Group Inc.
Structural • Civil • Surveying

REVISIONS	DATE	BY
1		
2		
3		
4		
5		
6		
7		
8		

CITY ENGINEER

DESIGN ENGINEER'S SEAL

PROJECT ENGINEER: BWB
PROJECT MANAGER: BWB
DRAWN BY: SCS
ISSUE DATE: 7-06-15
SCALE: AS SHOWN

PROJECT
BLACKSTONE PROJECT

SHEET TITLE
SITE PLAN

PROJECT
C15-006

SHEET
C-1

Blackstone Project

Submitted By:
Summit Engineering
55 W. Center St.
Heber City, Utah 84032
July 9, 2015
brian@summiteg.com

Submitted To:
Highland City Planning Dept.
5400 W. Civic Center Dr.
Highland City, Utah 84003

Contents

Consistency with the General Plan

The Highland City General Plan was completed and adopted in February 2008. This comprehensive land use document highlighted the future growth patterns and the desired future condition of the community, of which, the Town Center zone was a key element. The General Plan states that, the Town Center is proposed to be a mixed use, walkable community. Since adoption of the General Plan, the Town Center zone has been partially built-out with the establishment of a park in the town square, civic functions, such as the municipal offices, library, and courts, commercial/ retail, and housing. This project provides high-density housing as a use which is compatible with the other, existing uses in the zone and meets the goals and objectives of the Town Center component of the General Plan.

Figure 1 Current Site Conditions

Compliance with the Development Code

The Blackstone project is located within the Town Center Overlay zone. The purpose of this zone is provide a central area where retail and residential land uses can be blended an attractive and walkable environment. The zone allows for high-density development with well-planned open space gathering areas. The zone also allows commercial, retail and civic functions within the overall zoning classification and provides direction to developers with respect to long term planning within the zone to promote successful development in the Town Center.

The project meets the objectives on the Town Center zone by providing an attractive and well-planned high-density residential component to the Town Center Overlay, immediately adjacent to the public park in the Town Square and nearby the Highland civic functions to the south of the park.

According the Town Center Land Use map, the project is also located within a "Flex Use" land use category which allows for attached high density residential uses, live-work uses, office uses, retail uses, or any combination of the four.

The proposed Blackstone project consists of 86 attached multi-family units in the Town Center zone, is compliant, as a Conditional Use, with the Highland Center Development Code (2013).

Compatibility with adjacent property

The Town Center consists of a mix of civic, park, commercial/ retail, and residential uses all within a walkable traditional town environment. Mixed uses in close proximity to one another is an important component of the Town Center zone. This project will in-fill an undeveloped parcel within the Town Center zone, bounded by existing uses including the town square park, the municipal offices, commercial uses, and other residential uses.

Site and Building Design

Site Plan

The property consists of 7.76 acres of land. The parcel is currently undeveloped as shown on the image below.

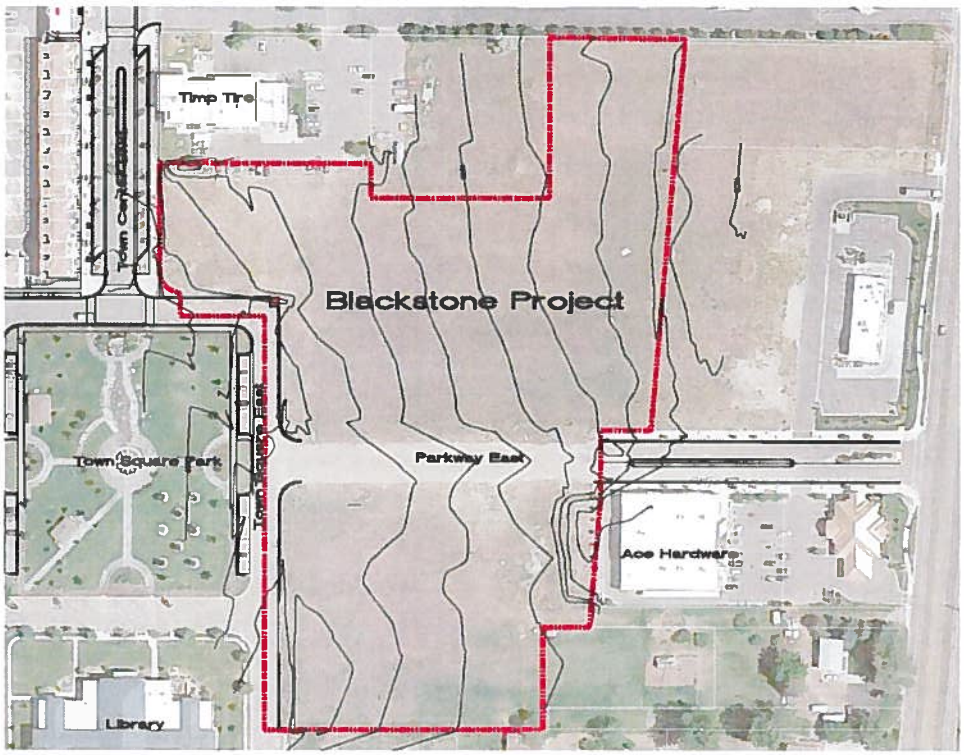

Figure 2 Property Boundary

The project area is located along the east and northeast of the town square park and on both sides of Parkway East Blvd, roughly to the existing Ace Hardware building along the eastern boundary and Timp Tire to the north. Access to the project is afforded via Parkway East and Town Square East.

The Blackstone project consists of 86 attached, townhouse units, for a density of 11 units per acre as shown on the site plan below. Allowed density is 12 units per acre. All of the units will have two-car garages, plus parking stalls for guests, open space, patios, plazas and other urban amenities. Sidewalks, throughout the project, will provide connectivity within the development and to other land uses in the Town Center zone. Two seating area/ plazas are proposed for the project as shown on the site plan. Both will be paved, benches/ seating and bike racks are to be provided, and be landscaped in a manner which provided some screening and is visually appealing. Beyond the sidewalks and plazas, hardscape areas for the project shall consist of the project parking areas, which will be asphalt, similar to the streets. The areas between the townhouse driveways, about 40 square feet each, will consist of smooth-finished concrete.

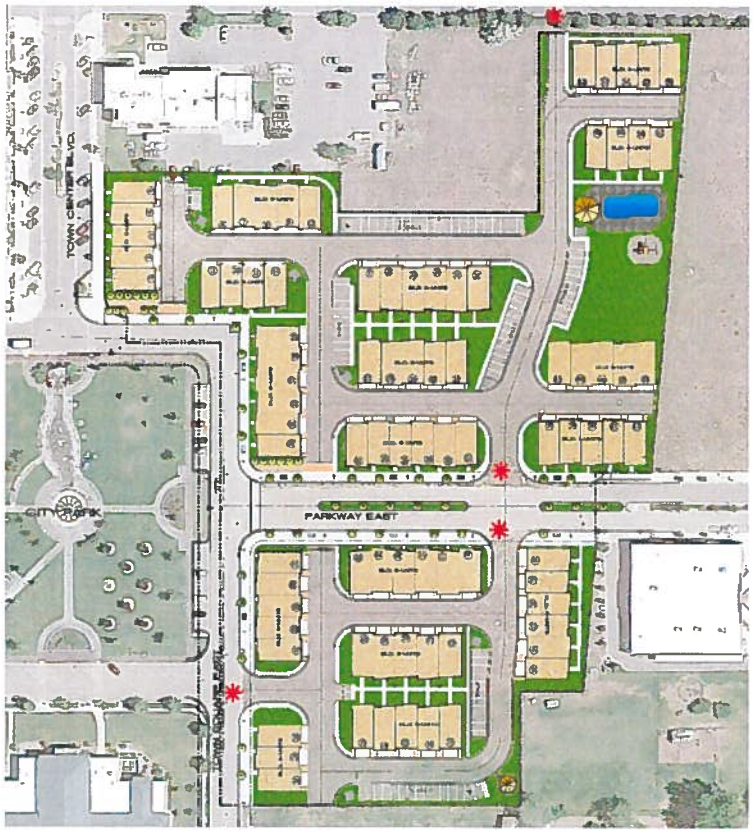

Figure 3 Proposed Site Plan

Architecture

Architecture consists of a mix of attached multi-family units in a variety of configurations ranging from a 3-plex up to a 6-plex. The basic footprint is a 6-plex product as shown on the attached image.

Figure 4 Proposed Architecture Rendering

The attached units are a townhouse configuration with three above-ground levels along with one below grade level. The architectural style is neo-craftsmen style with a variety of façade treatments including stone veneer, stucco, and timber.

A single unit footprint is 24' x 48' for a footprint square footage of 1,152 SF. The total unit square footage is about 3,207 SF and 528 SF for the garage. At 86 units the project total would be about 107,136 SF or about 32% coverage of the site. Each unit would have three bedrooms.

Building massing is to be varied by the fact that in addition to the basic 6-plex unit type, the units shall also include a 3-plex, 4-plex, and 5-plex. This unit mix is required to adequately respond to the dimensions of the overall lot layout and provide suitable pedestrian spaces.

Landscape Design

The project will be landscaped consistent with requirements set forth in the Town Center overlay zone. Lawn areas will be sodded. Planter beds shall consist of a mix of trees, large and small shrubs and perennials. All planter beds shall be wood-mulched. Most of the detailed design will focus on the unit entrances and streetscape frontages in order to provide a visually-appealing project. Parking areas, the project boundary, and utility boxes will all be screened with plant materials.

Vehicle Circulation and Impacts

This proposed subdivision is bounded on the south by Parkway East, to the west is Town Square East and to the north is Town Center Blvd. Following is an assessment of the traffic impacts.

Ingress and Egress

The project will be accessed from two points within the Town Center streetscape, the first is on Town Square East, at the Civic Drive intersection, and the second is off of Parkway East. The Parkway East ingress is about 425 feet from the intersection with Town Square East.

Internal Vehicular Circulation

Internal vehicular circulation is comprised of a series of 26' wide asphalt roads, with 2' rolled gutters on each side, accessing all of the units. All of the units have garages within the building footprints and parking stalls are provided within the internal road network for guests. All of the intersections are at 90 degrees and flat, providing ease of access for delivery or emergency vehicles.

Pedestrian and Alternative Vehicle Considerations

Sidewalks are provided to all of the units and access all of the open space and landscape amenities of the project and to the amenities offered in the Town Center area. In addition to sidewalks internal to the project, along Parkway East and Town Square East will be a public sidewalk with a width of 15 feet. All intersections and curb cuts will be handicapped-compliant.

Volume and Character of Traffic

Due to the number of homes (86 homes in this proposed subdivision) the traffic impact will be relatively small. Multi-family residences generate, on average, 6.72 vehicle trips per day. This equates to an additional traffic load of about 578 vehicle-trips from this subdivision each day. Traffic patterns are anticipated to be similar to other residential developments in that there will be morning and evening peaks associated with typical commuting patterns and a limited number of vehicle trips

during the course of the day.

Parking and Loading

All of the units in Blackstone will have a two-car garage for the residents. Additionally, 86 stalls of parking will be provided for guests, as noted on the site plan.

No loading or unloading activities associated with commercial/ retail operations are anticipated.

Fire Protection

Fire protection for the Blackstone project will consist of a series of measures as outlined below. There are two existing fire hydrant along Parkway East as noted on the site plan. These along with four additional fire hydrants are proposed to provide municipal fire protection. All will provide full access to the project infrastructure within a 300 foot radius of each hydrant. Road widths are proposed to be 30 feet in width (curb to curb) and all of the road intersections and road curves will accommodate fire vehicle turning radii. No on-street parking is anticipated within the project area.

Street addresses are to be located at the front and rear facades of the project units and to be readable from the Blackstone roads.

All units within the project will have installed fire/ smoke alarms and marked fire exit locations.

Impact on Public Services

Utilities

Existing water, sanitary sewer and irrigation lines exist in the Parkway East and Town Square Rights-Of-Way. This project would tap into the respective lines to provide utility services for all of the proposed units. These existing main lines have been sized to accommodate utility demand for this project.

Storm Drainage-Storm drainage in this area consists of storm drain grates located in low points or other drainage areas, which lead to sub-surface sumps. Please see the attached Drainage Control document for further details. A soils report has been prepared and submitted for the project as well.

Schools

The Blackstone project will provide 86 units to the Highland City. While it is difficult to estimate the student population and the impact on the school district, Highland City demographics indicate that the average household size is 4.53 people, with about 48% having children under the age of 18. Approximately 12% of Utah County households are made up on individuals. Should this project reflect the average demographics of Utah County, it would contribute about 260 school-aged children to the school district. It should be noted that families which occupy townhouses typically have smaller family sizes then the families occupying a single family residence.

Recreation

The Blackstone project envisions an outdoor pool, hot tub and community center on a large open space parcel within the project. Additionally a children's play structure is also anticipated. These amenities would be for the use of residents and guests and are portrayed on the site plan in a large open space parcel to along the northeast side of the project. Recreation resources in Highland City would be impacted by the overall population increase associated with the project. Assuming the average household size of 4.53 and with 86 units, the number of people contributed by the project would be about 390. Highland City has a population of 15,523 (2010 Census) with this project contributing 2.5% to the population at build-out and full occupancy. This is a minimal increase in the overall population and the current recreation resources of Highland City would seem to be able to accommodate his increase.

Project Impacts

This project is anticipated to have minimal impacts to the Town Center area because of the residential nature of the proposed project.

Screening and Buffers

Screening of the project is provided by the landscape plan for the project. Refer to the landscape plan for details.

Proposed Outdoor Activities and Storage

There are no Outdoor activities or storage functions associated with this project.

Hours of Operation

There are no commercial activities proposed and so, no hours of operation.

Noise, smoke, odors, etc...

With the exception of construction of the project, there would be no noise, odors, or smoke associated with the project, other than what would be expected from typical residential uses.

CITY COUNCIL AGENDA REPORT

Item #6

DATE: July 21, 2015

TO: Honorable Mayor and Members of the City Council

FROM: Nathan Crane, Interim City Administrator/Community Development Director

SUBJECT: Approval for the reconstruction of the Dry Creek Trail Phase 3

STAFF RECOMMENDATION:

City Council authorize staff to bid and construct the Main City Trail in Phase 3 of the Dry Creek Subdivision

BACKGROUND:

Over the past several months the City Council has been discussing the status of the Dry Creek Bench Trail. On May 5, 2015, the Council directed staff to return with a phase plan for engineering work, removal and replacement of asphalt for Phase II and III or the expansion of the easements.

The Dry Creek Bench Trail located in Phase 3 of Dry Creek is designated as a Main City Trail on the Trail Master Plan. An amendment to the trail master plan would be required to remove the trail under Section 12.30 of the Municipal Code. Because of the street layout, there is not direct access to Ridgeline Elementary School without having to use the sidewalk on Highland Boulevard. To access the school via the street network and not using Highland Boulevard, students would need to travel east to Granite Flats Road via Ridge Road.

The City Engineer has prepared a cost estimate as follows:

- Trail Design: $15,846.23
- Construction of a Gravel Trail: $31,339.11
- Construction of an Asphalt Trail: $44,089.11
- Total Cost Gravel Trail: $47,185.34
- Total Cost Asphalt Trail: $59,935.34

Other options are as follows:

Removal of the Trail

This option would remove the trail as shown. The cost to remove the trail is estimated at $8,324. This trail is designated as a Neighborhood Option Trail. Neighborhood Option Trails can be removed without a General Plan Amendment under Section 12.30 of the Municipal Code.

Expand the Existing Easement to Include the Trail

The trail is in a storm drain easement that cannot be built on so there is less value to the land. This option would require the modification of the easement to include the existing trail. The City Engineer's estimate is $44,476.

If the bid comes in below or at the Engineer's estimate staff is requesting authorization to proceed with the project. If the bid comes in above the estimate, staff will bring the item back to the Council for consideration.

FISCAL IMPACT:

Funding for the trail was included in the FY 2015/2016 Budget in account 10-70-38 which has $80,000.

ATTACHMENTS:

1. Dry Creek Phase 3 Survey
2. City Engineer Bid Estimate
3. Trail Summary

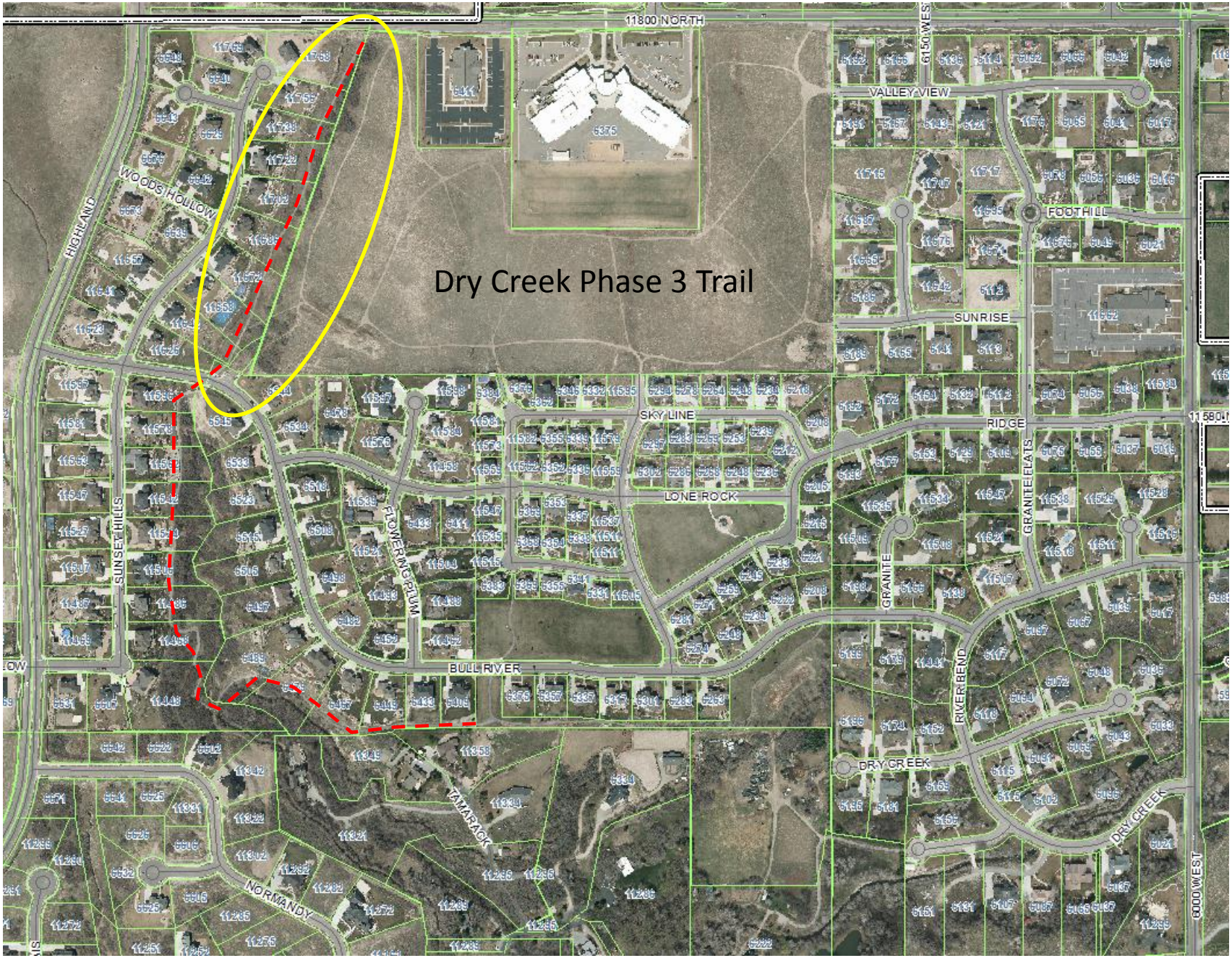
Dry Creek Phase 3 Trail
11800 NORTH
6150 WEST
VALLEY VIEW
FOOTHILL
SUNRISE
RIDGE
SKY LINE
LONE ROCK
BULL RIVER
DRY CREEK
WOODS HOLLOW
HIGHLAND
SUNSET HILLS
FLOWERING PLUM
GRANITE
GRANITE FLATS
RIVER BEND
TAMARACK
NORMANDY
6000 WEST

Client: Highland City - Bull River Trail
Engineer's Opinion of Cost
Project # 50-14-031
Date: June 16, 2015

UNIT PRICE SCHEDULE - Bull River Trail Removal and Replacement					
Item #	**Description**	**Unit**	**Quantity**	**Unit Price**	**Amount**
1	Mobilization	LS	1	$3,000.00	$3,000.00
2	Environmental Controls	LS	1	$1,000.00	$1,000.00
3	Remove and Dispose of Existing Asphalt	SF	10,000	$0.50	$5,000.00
4	Clearing, Grubbing, and Tree Removal	LS	1	$7,500.00	$7,500.00
5	Excavation and Grading	CY	737	$12.00	$8,839.11
6	Furnish, Place, Shape and Compact 6" Thick Untreated Base Course	TON	300	$20.00	$6,000.00
7	Furnish, Place, Shape and Compact 3" Thick Asphalt	TON	150	$85.00	$12,750.00
				TOTAL	**$44,089.11**

Project Work Plan - DRY CREEK PHASE 3 TRAIL

Engineering/Design Services Phase		
TASK NO.	DESCRIPTION - SCOPE OF SERVICES	TOTAL BUDGET
1	Site Plan design	$2,809.88
2	Site Grading Plan	$3,446.92
3	Contract/Bid Documents	$1,475.64
4	Project coordination (team meetings, site visits, etc.)	$1,566.34
5	Project coordination (client meetings)	$765.00
6	Construction coordination	$1,341.88
	Total Estimate	**$11,405.66**

Survey and Construction Staking Services Phase		
TASK NO.	DESCRIPTION - SCOPE OF SERVICES	TOTAL BUDGET
1	Topographic Survey and Base Map Creation	$1,800.00
2	Construction staking	$1,200.00
	Total Estimate	**$3,000.00**

	Subtotal	$14,405.66
	Contingency - 10%	$1,440.57
	Project Work Plan Total	**$15,846.23**

CITY COUNCIL AGENDA REPORT

Item #7

DATE: Tuesday, July 21 , 2015

TO: Honorable Mayor and Members of the City Council

FROM: Nathan Crane, Interim City Administrator

BY: JoD'Ann Bates, City Recorder

SUBJECT: MOTION: APPROVAL AND AUTHORIZING THE MAYOR TO SIGN A CONTRACT WITH C. PRICE TRANSCRIPTION LLC.

BACKGROUND:

The Highland City office and staff have recently undergone some changes and unfortunate employee events, Highland City staff is essentially down by two full-time employees. With the departure of Aaron Palmer and the recent illness of Jill Ballamis, City Treasurer, employees have taken on extra responsibilities to help with the day to day operations.

Jill Ballamis serves as the City Treasurer. Prior to Jill, Jody served as the City Treasurer for two years. Fortunately between Jody and other employees we have been able to pick up the day to day responsibilities of the Treasurer for the time being. Due to the added responsibilities it is necessary to request additional help.

Staff is requesting to hire a transcriber for the City Council Meeting Minutes. Transcribing of the City Council Meetings consist of approximately 2 hours per hour of meeting. This means for every average 4 hour council meeting it take approximately 8-10 hours to transcribe the meeting, review the minutes and complete a draft for approval, this is time that can be utilized ensuring the treasurer duties are properly executed. C. Price Transcribing is contracted with other city entities and has been in business for several years, transcribing specifically city meetings.

Once a meeting is recorded, an audio file is sent to C. Price and with communications between the City Recorder and C. Price the meeting minutes are transcribed, reviewed and a draft completed is then send back as a complete file ready for review and approval from the City Council typically within one week of the receipt of the audio recording. The contract with C. Price is for an "as needed" basis, we are not obligated to have them do all the meetings, but foresee them doing the majority of them during this time.

The 2014-2015 budget for transcribing was $3,000 but was not used and therefore decreased. The 2015-2016 budget holds $1,500. If each meeting is 4 hours, it will take 8-10 hours to transcribe at $20 per hour is equal to $200 per meeting and we have 22 meetings in a year, this equals $4,400. This does not include longer more in-depth meetings, extra meetings, work sessions and off-site meetings. Staff

will try to do as much of the transcribing as possible for the works sessions and off-site meetings to defer the costs, depending on time restraints and other responsibilities. The $4,400 per year may increase due to those circumstances but staff does not foresee it increasing more than approximately $6,000 per year. Mid-year and end of the fiscal year adjustments will need to be made to account for the overage.

FISCAL IMPACT:
Approximately $4,400.00 to $6,000.00 per fiscal year from GL#10-47-14

ATTACHMENTS:
- Proposed Contract

AGREEMENT RELATING TO SERVICES FOR TRANSCRIPTION OF CITY COUNCIL MINUTES

WHEREAS, Highland City ("City") and C. Price Transcription, LLC ("Price") desire to enter into a Agreement whereby Price may transcribe the minutes for public meetings as requested by City; and

WHEREAS, City has determined that it is in the public interest to enter into this Agreement based on the consideration it receives hereunder;

THEREFORE, in consideration of the promises, covenants, and conditions contained herein, and other good and valuable consideration, the parties agree as follows:

TERMS

1. SERVICES. Price agrees to transcribe audio recordings of city meetings into written minutes as requested by City. The transcription will be prepared in a timely manner to allow for official adoption of the minutes at the next regularly scheduled meeting. It is anticipated the transcription will typically be completed within one week of receipt of the audio recording, except in circumstances that require additional time based on the length of the recording.

2. REMUNERATION. The City agrees to pay Price an hourly fee at the rate of $20.00 per hour, which time shall be detailed in a monthly billing statement and submitted to the City for payment. If payment is not tendered within 30 days of receipt of the billing statement, a late fee of $75.00 will be charged the City. Price will not bill more than four (4) hours per meeting hour.

3. TERM. The Services hereunder shall be rendered on an 'as needed' basis and will continue until this Agreement is terminated by either party.

4. TERMINATION. This Agreement may be terminated by either party at any time for any reason. Termination of this Agreement may be communicated orally.

5. STATUS. Price shall be considered an independent contractor and not a city employee.

6. SEVERABILITY. The unenforceability or invalidity of any one or more provisions hereof shall not render any other provisions herein contained unenforceable or invalid and each term, covenant and condition hereof shall be enforced to the fullest extent permitted by law.

7. INTERPRETATION AND ENFORCEMENT. The laws of the State of Utah shall govern the validity, construction, performance and enforcement of this Lease.

HIGHLAND CITY:

_____
MAYOR MARK THOMPSON
DATE:

Attest:

_____
CITY RECORDER

C. PRICE TRANSCRIPTION, LLC:

_____
DATE:

_____
CAMILLE PRICE

CITY COUNCIL AGENDA REPORT

Item #8

DATE: Tuesday, July 21 , 2015

TO: Honorable Mayor and Members of the City Council

FROM: Nathan Crane, Interim City Administrator

BY: JoD'Ann Bates, City Recorder
Brian Braithwaite, City Council Member

SUBJECT: RESOLUTION: MAKING AMENDMENTS TO THE PERSONNEL POLICY AND PROCEDURES MANUAL FOR HIGHLAND CITY EMPLOYEES

BACKGROUND:
The purpose of annual leave is to allow employees time away from work for rest, renewal, and time with their families. The City is better served when the employees have an opportunity to get away from their employment responsibilities and focus on other areas of their lives. Annual leave provides the employee an opportunity for more balance in their life which typically helps the individual to be a more productive and a better employee.

Currently the city's Personnel Policies and Procedures allow for Highland City Employees to accrue unlimited annual leave hours. When an employee terminates (voluntary or involuntary) they will be paid for the total accumulated annual leave hours The current policy may encourage some employees to accrue annual leave instead of using it. The city benefits from employees using their annual leave for the reasons previously described.

The changes proposed would allow the Highland City Employees to accrue Annual leave at the same rates as in the current policy. An employee who reaches 175% of their yearly annual leave on their anniversary date of hire would lose all leave that exceeds 175% of annual leave accrued.

Currently there are 18 employees who have accrued more than 175% of their annual leave accrual rate. It is recommended that these employees be compensated for hours in excess of 175% of their annual leave accrual rate. If approved, this change would take effect with the first pay period of August 2015. Employees being compensated for hours in excess of 175% will have the following options: 1) Complete pay out; 2) Complete pay out in January 2016; 3) Payments may be split between 2015 and 2016. For all options the employee may have the option for a cash pay out or the ability for the payment to be placed in a designated 457 or 401k account

FISCAL IMPACT:
There is no fiscal impact. Payout to employees who exceed the maximum constitutes a cash impact.

- Updated cash impact will be provided to the City Council on July 21st meeting.

ATTACHMENTS:

- Proposed Resolution

RESOLUTION NO. R-2015-__**

A RESOLUTION OF THE GOVERNING BODY OF HIGHLAND CITY AMENDING THE PERSONNEL POLICIES AND PROCEDURES MANUAL WITH REGARD TO VACATION TIME (ANNUAL LEAVE)

WHEREAS, the City Council views the purpose of annual leave to allow employees time away from work for rest, renewal, and time with their families; and

WHEREAS, the City is better served when the employees have an opportunity to get away from their employment responsibilities and focus on other areas of their lives.

WHEREAS, Highland City's current Personnel Policies and Procedures allow for Highland City Employees to accrue unlimited annual leave hours. When an employee terminates (voluntary or involuntary) they will be paid for the total accumulated annual leave hours and it is believed that this policy may encourage some employees to accrue annual leave instead of using it; and

WHEREAS, the City Council desires to find a resolution for providing adequate vacation benefits to employees while protecting City liability and to find an equitable solution to paying out employee vacation upon employee retirement, resignation or termination while protecting public funds;

NOW, THEREFORE be it resolved by the City Council of Highland City as follows:

1. The City Administrator is hereby directed to amend the Highland City Personnel Policies and Procedures Manual as originally adopted by Resolution 2000-06 with regard to the following items:

a. Accrual of Annual Leave. Employees may accrue up to 175% of their annual leave. If the employee's annual leave exceeds the maximum, on the anniversary date of employee's hire the excess annual leave will be lost.

b. Scheduling Annual Leave. Accrued annual leave must be scheduled with the employee's supervisor. In granting approval for leave, supervisors should consider the needs of the city as well as the employee's desires.

c. Scheduling Annual Leave After Notice of Resignation. Leave may not be taken after notice of resignation has been given by the employee.

d. Employees are required to give proper notice of resignation (2 weeks for regular employees; 4 weeks for department heads/exempt employees).

2. The current accrual rate of annual leave will remain unchanged.

The EFFECTIVE DATE of this resolution shall be immediately upon execution.

ADOPTED by the City Council of Highland City, Utah, this 21st day of July, 2015.

HIGHLAND CITY, UTAH

_____

Mark S. Thompson, Mayor

ATTEST:

_____

JoD'Ann Bates, City Recorder

CITY COUNCIL AGENDA REPORT

Item #9

DATE: July 21, 2105

TO: Honorable Mayor and Members of the City Council

FROM: Nathan Crane, AICP
Interim City Administrator/Community Development Director

SUBJECT: RESOLUTION AMENDING THE WATER CONNECTION FEE

STAFF RECOMMENDATION:

Adopt the resolution amending the water connection fee.

BACKGROUND:

The current water connection fee $1,835 plus a $360.00 for a water meter.

Utah Law requires that review fees only be established to cover the cost of providing the service. Staff commissioned a fee study to update this fee. The study was completed by Zion's Bank Public Finance.

The proposed fee is $536.00 for a three-quarter inch meter and $652.00 for a one inch meter. For meters larger than one inch the cost will be cost of the meter plus $100.75. The proposed fee includes the cost of the meter and staff time for installation/inspection of new meters.

FISCAL IMPACT:

Reduction in water connection from $2,195 to $536.00 for a three-quarter inch meter. For FY15/16 we estimated $100,000 in revenue from new water connections. This would be reduced to $46,400.

ATTACHMENTS:

1. Resolution
2. Fee Study

RESOLUTION NO. 2015-**

AN RESOLUTION OF THE HIGHLAND CITY FEE SCHEDULE AMENDING THE CULINARY WATER CONNECTION FEES TO REFLECT THE COSTS OF PROVIDING SERVICES

WHEREAS, the Highland City Council has determined that the fee schedule should be amended to reflect the costs of providing services.

NOW, THEREFORE, BE IT Resolved BY the City Council of Highland City, Utah:

SECTION 1. The Highland City Fee Schedule is hereby amended to amend as follows:

a) Three-quarter inch meter: $536.00
b) One inch meter: $652.00
c) The non-standard connection is $100.75 plus the actual cost of the meter.

SECTION 3. This Resolution shall take effect immediately upon its first posting or publication.

PASSED AND ADOPTED by the Highland City Council, July 21, 2015.

HIGHLAND CITY, UTAH

_____
Mark S. Thompson, Mayor

ATTEST:

_____
JoD'Ann Bates, City Recorder

COUNCILMEMBER	YES	NO
Brian Braithwaite	☐	☐
Tim Irwin	☐	☐
Dennis LeBaron	☐	☐
Rod Mann	☐	☐
Jessie Schoenfeld	☐	☐

HIGHLAND CITY

WATER CONNECTION FEE ANALYSIS

INTRODUCTION

Zions Bank Public Finance has been retained by the Highland City to assist with the development of a connection fee for the culinary water system. The cost of the connection is based upon the time for City staff to inspect the meter installation, create a new account for the connection, and for the cost of the meter and fittings. The cost of City staff's time is generally flat regardless of the type and size of meter however the cost of the meter may be adjusted in the case of a unique or larger meter size. In those cases the meter and fittings will be charged at the actual cost to the City to purchase.

COST ANALYSIS

INSTALLATION/INSPECTION COST

It is estimated that a City employee will spend approximately 1.2 hours onsite installing and inspecting new culinary water meters and connections. The 1.2 hours is typical for most connections however if a unique situation arises that requires more than the typical time then additional charges may be assessed at the City's cost of $35/hour.

ADMINISTRATIVE COST

A second step in creating a new connection is the creation of a new account in the billing database and accounting system, and time for ordering necessary equipment. One hour of time at $35/hour is typical for creating the new account regardless of the size or type of meter. For non-standard meters there is additional cost and time for selecting and ordering the appropriate meter which raises the time requirement from one hour to 1.25 hours.

OVERHEAD EXPENSE

The installation requires City equipment, tools, and vehicles which are partially allocated to the cost of the meter install. It is estimated that approximately $15 in general overhead expense can be allocated to the cost of a single meter installation.

METER AND FITTING COSTS

The cost of the meter is dependent upon the size, type, and current pricing given by providers. The majority of culinary water connections are residential 3/4" and 1" displacement meters. The typical meter and fitting costs are $444.00 and $560.00 respectively. Commercial connections may require larger meters which will be more expensive. The price of any meter other than at 3/4" and 1" displacement will be assessed at the actual cost of meter.

SUMMARY OF CONNECTION FEE CALCULATIONS

The following is the calculation of the culinary water connection fee for a 3/4" and 1" displacement meters as well as a non-standard meter calculation. A non-standard calculation is used when a meter other than a ¾" or 1" is required.

City Staff Commitment by Process	3/4" Displacement	1" Displacement	Non-Standard
Hourly Rate by Participant	$ 35	$ 35	$ 35
Administrative/Account Cost @ $35 per Hour	1.00	1.00	1.25
Installation/Inspection Cost @ $35 per Hour	1.20	1.20	1.20
Hours for City Staff	2.20	2.20	2.45
Cost for City Staff	$ 77.00	$ 77.00	$ 85.75
General Overhead (Tools, Equipment, Etc.)	15.00	15.00	15.00
Cost of Meter	$ 444.00	$ 560.00	TBD
Total Connection Fee per Connection	$ 536.00	$ 652.00	$ 100.75

CITY COUNCIL AGENDA REPORT

Item #10

DATE: July 21, 2015

TO: Honorable Mayor and Members of the City Council

FROM: Nathan Crane, AICP
Interim City Administrator/Community Development Director

SUBJECT: ORDINANCE – ADOPTION OF AN ENGINEERING DESIGN CRITERIA AND STANDARD DRAWINGS FOR PUBLIC IMPROVEMENTS

STAFF RECOMMENDATION:

Adoption of the new engineering design criteria and standard drawings for public improvements.

BACKGROUND:

This item was reviewed at the June 16, 2015 City Council meeting.

Over the past several months, staff has been updating and revising the cities engineering standard drawings and design criteria for public improvements. The purpose of the Design Criteria is to govern any design and engineering performed regarding public improvements. Engineers and designers working will review these requirements before designing and creating construction plan sets for public improvements. These documents contain design criteria that are in addition to normal and acceptable engineering practices including APWA, AWWA AASHTO, and ACSE standards and are to be used on designs in the City.

The purpose of this item is to present these documents to the City Council. The Council should review the documents and provide staff with any comments by July 8, 2015. The Council will consider adoption of these documents at the July 21, 2015 City Council meeting.

FISCAL IMPACT:

N/A

ATTACHMENTS:

1. Ordinance

ORDINANCE NO. 2015-**

AN ORDINANCE OF THE HIGHLAND CITY COOUNCIL, HIGHLAND UTAH, ADOPTING THE HIGHLAND CITY ENGINEERING DESIGN CRITERIA AND STANDARD DRAWINGS FOR PUBLIC IMPROVEMENTS JULY 2015 EDITION AND REPELAING ALL PREVIOUSLY ADOPTED ENGINEERING DESIGN CRITERIA AND STANDARD DRAWINGS FOR PUBLIC IMPROVEMENTS; PROVIDING FOR CORRECTIONS, SEVERABILITY, AND AN EFFECTIVE DATE.

WHEREAS, the Engineering Design Criteria and Standard Drawings for Public Improvements impose standards for the design and construction of infrastructure improvements in the Highland City; and

WHEREAS, an updated version of the Engineering Design Criteria and Standard Drawings for Public Improvements is needed to: provide clarification on existing requirements; bring the existing standards into compliance with regulatory requirements, City policies and City master plans; and

WHEREAS, the Mayor and Council of the Highland City, Utah find the adoption of this Ordinance to be in best interests of the public health, safety and welfare; and

NOW, THEREFORE, BE IT Resolved BY the City Council of Highland City, Utah:

SECTION 1. That certain documents titled "Engineering Design Criteria" and "Standard Drawings for Public Improvements" July 2015 EDITION" as shown on Exhibit A, a copy of which is on file with the City Clerk, adopted and made a part hereof as if fully set forth in this ordinance.

SECTION 2. All existing "Engineering Design Criteria" and "Standard Drawings for Public Improvements" are hereby repealed as of the effective date of this ordinance.

SECTION 3. The City Administrator, City Recorder and the codifiers of this ordinance are authorized to make necessary clerical corrections to this ordinance, including, but not limited to, the correction of scrivener's/clerical errors, references, numbering, section/subsection numbers any and references thereto.

SECTION 4: If any section, subdivision, sentence, clause, phrase or portion of this Ordinance is for any reason held invalid or unconstitutional by any court of competent jurisdiction, such portion shall be deemed a separate, distinct, and independent provision and such holding shall not affect the validity of the remaining provisions of the ordinance or parts thereof.

SECTION 5: This ordinance shall become effective as prescribed by law.

PASSED AND ADOPTED by the Highland City Council, July 21, 2015.

HIGHLAND CITY, UTAH

_____
Mark S. Thompson, Mayor

ATTEST:

_____
JoD'Ann Bates, City Recorder

COUNCILMEMBER	YES	NO
Brian Braithwaite	☐	☐
Tim Irwin	☐	☐
Dennis LeBaron	☐	☐
Rod Mann	☐	☐
Jessie Schoenfeld	☐	☐

Exhibit A

Design Criteria for Public Improvements – July 2015 Edition
Highland City Standard Drawings – July 2015 Edition

DESIGN CRITERIA FOR PUBLIC IMPROVEMENTS
2015

HIGHLAND CITY

DESIGN CRITERIA FOR PUBLIC IMPROVEMENTS
TABLE OF CONTENTS

DIVISION 1 GENERAL REQUIREMENTS

Section 1.01 PURPOSE OF DOCUMENTS

The purpose of the Design Criteria is to govern any design and engineering performed regarding public improvements. Engineers and designers working on projects within Highland City should thoroughly read and understand these requirements before designing and creating construction plan sets for public improvements.

This division contains design criteria that are in addition to normal and acceptable engineering practices including APWA, AWWA AASHTO, and ACSE standards and are to be used on designs in the City. The City Engineer shall have authority to modify the criteria as needed to meet changing or unusual needs or conditions.

Section 1.02 USES OF THESE CRITERIA

The criteria contained in this document are organized into divisions and sections covering specific areas of design. It will often be necessary to use a number of sections for the design of a single project. For instance, the design of a street may require the use of standards regarding streets, sidewalks, pressure pipe, sewer and storm drain.

These standards are a guide for design, but not a substitute for good engineering. It is the obligation of the designer to use these standards responsibly and professionally to produce designs conforming with commonly accepted engineering practices and the Code of Professional Conduct. It will at times be desirable and/or necessary to vary from the standards in this document to produce a good product. When the need arises, please refer to the following section on variances.

Section 1.03 VARIANCES

When it becomes necessary or desirable to vary from the standards presented in this document, a variance may be requested from the City Engineer. Such a request shall be made in writing and will include:

a) The standard to be varied.
b) The proposed variation.
c) Justification for the variance.

A written response will be given within seven business days of the request. A variance determination may be appealed to the City Council.

Section 1.04 AMENDMENTS

Amendments to these standards may be requested by writing the City Engineer with details and justification for an amendment. The City Engineer along with the City Staff will meet periodically to discuss proposed amendments and make recommendations to the City Council. The City Council will entertain changes to the standards once a year at their discretion.

DIVISION 2 STREET DESIGN CRITERIA

Section 2.01 GENERAL

The following street design criteria shall apply to all street designs in the City. It will be necessary to refer to the current master transportation plan for correct street designation. Design shall comply with the current AASHTO guidelines on geometric design. Additional design criteria are specified in the Standard Drawings.

Section 2.02 STREET CLASSIFICATION

Streets will be classified according to their functional use as described below. Existing facilities may not fully comply.

Sub-Section A. Arterials:

The arterial streets provide continuous routes for the movement of large volumes of all types of through traffic across Highland and between Highland and outlying areas. Geometric design and traffic control should emphasize the safe movement of through traffic and minimize property access. Access to arterials shall be limited from local streets or individual driveways. Arterials will typically be multi-lane streets and shall have separate turning lanes at intersections. Arterials will connect to the Expressway system.

Sub-Section B. Collectors:

The collector streets provide continuous routes for the movement of large volumes of all types of through traffic across Highland and may also connect to outlying areas. Geometric design and traffic control should emphasize the safe movement of through traffic and minimize property access. Access to collectors shall be limited from local streets or individual driveways. Collectors will typically be two-lane streets with separate turning lanes at intersections, and may be multi-lane streets if warranted by traffic volumes.

Sub-Section C. Local Streets:

The Local Streets serve as a means of access to abutting property. They are intended to serve low speeds and short trip routes, with usually less than 500 vehicles per day.

Sub-Section D. Design Vehicle for Classification Type:

All street classifications are designated to carry passenger vehicles and up to the following Design Vehicle Types:

1) Arterial Streets up to WB50.
2) Collector Streets up to WB40.
3) Local Streets up to SU30.

Section 2.03 TRAFFIC IMPACT STUDIES

A traffic impact study may be necessary to identify, review and make recommendations for mitigation of the potential impacts a development may have on the roadway system. Physical and operational characteristics of the roadway are typically identified. The development design engineer is expected to follow the Utah Department of Transportation document entitled “Traffic Impact Study Requirements” (current edition). Generally, a traffic study may be required for all developments expected to produce over 100 average daily trips (ADT). The City engineer will have the authority to dismiss this requirement if it can be illustrated that the traffic impact will be negligible on the roadway system. All developments expected to produce over 100 ADT must be discussed with the City Engineer to determine the necessity of this requirement.

Section 2.04 MINIMUM AND MAXIMUM GRADES

The minimum acceptable grade slope measured at the centerline of the street is one-half percent (0.5%). The flow line of curb returns, knuckles and cul-de-sacs' shall also be no less than one-half percent (0.5%). The maximum slope varies depending on road classification. The sub-sections below shall be used to determine maximum slope.

Sub-Section A. Arterials and Collectors:

Arterial and Collector streets shall be limited to a maximum grade of eight percent (8%). Sustained grades (600 feet or more) shall be limited to seven percent (7%).

Sub-Section B. Local Streets:

Local streets shall be limited to maximum grade of twelve percent (12%). Sustained grades (600 feet or more) shall be limited to eight percent (8%).

Sub-Section C. Cul-de-sacs:

Cul-de-sacs shall be limited to a maximum grade of six percent (6%). The cul-de-sac shall terminate at the bulb with a grade not to exceed three percent (3%) for the last one hundred feet (100') of traveled surface.

Sub-Section D. Vertical Alignment:

All changes in vertical alignment shall be made by vertical curves with minimum length of one hundred feet (100') for local streets and three hundred feet (300') for arterial and collector streets. Actual vertical curve length shall be a function of design speed.

Section 2.05 STREET DESIGN

The following street design criteria shall apply to all street designs in the City. Additional design criteria are specified in the Standard Drawings.

Sub-Section A. Design Speeds:

The design speed will be used to design and establish geometric features including sight distance, intersections, etc. to current AASHTO standards. The following minimum design criteria shall be met:
1) Local streets shall be designed to at least 30 mph.
2) Collector streets shall be designed to at least 40 mph.
3) Arterial streets shall be designed to at least 50 mph

Posted speed limits shall be 5 mph less than the listed design speeds.

Sub-Section B. Horizontal Curves:

Changes in horizontal alignment of over one degree shall be made using horizontal curves. In some cases horizontal alignment changes on local streets may be allowed without a horizontal curve if the resulting alignment functions as a two-legged intersection.

1) Local streets shall have a centerline radius of at least 150 feet.
2) Collector streets shall have a centerline radius of at least 370 feet.

Sub-Section C. Vertical Curves:

Streets shall be designed with vertical curves where grade changes greater than 1% occur. Vertical curves shall be designed using the appropriate design speed according to the latest AASHTO design guidelines. It is encouraged to include the "K" value in the profile illustrating the vertical curve.

Sub-Section D. Cul-de-sacs:

The cul-de-sac shall be limited to a maximum length of six hundred feet (600') as measured form the intersection centerline to the center of the cul-de-sac. Cul-de-sacs shall have a minimum radius of fifty feet (50'). Cul-de-sac returns shall have a twenty-four foot (24') radius at TBC. Downhill cul-de-sacs are strongly discouraged and may only be allowed if it can be demonstrated that surface drainage will be controlled in a manner acceptable by the City Engineer and approved by City Council.

Sub-Section E. Widening Asphalt along an Existing Road:

When a development project requires asphalt widening due to the placing of new curb and gutter along an existing road, the existing asphalt shall be cut a minimum of two feet (2') from the lip of gutter and twelve inches (12") from the existing edge of asphalt. The cross slope of the new asphalt must be between one percent (1%) and four percent (4%). The construction drawings must adequately show the cross slope and the asphalt "saw cut line" required to create the slope. Overlays shall be a minimum thickness of two inches (2").

Sub-Section F. Finished Width of Exterior Roads:

When roads are designed along the exterior of developed property, a minimum of ten (10) feet of unobstructed asphalt on the opposite side of the designed centerline must be constructed. Depending on the classification of the road, additional width may be requested by the City.

Sub-Section G. Lane Widths, Turning Lanes and Clear Zones:

1) The minimum traffic lane width will be 12 feet. Pavement widths are as defined in the Highland City Standard Drawings.
2) Turning lanes shall be incorporated on arterial and collector street designs. Length of separate turning lanes shall be designed using the currant addition of AASHTO and based on a capacity analysis. Width of separate turning lanes shall be 12-foot width for arterial streets and 12-foot width for collector streets.
3) A three (3) foot clear zone shall be required on all streets built with a curb and having a speed limit of 25 mph or less. Streets with speed limits greater than 25 mph will use the AASHTO Standard to determine clear zone limits. Variances to clear zone requirements will be considered for overhead electrical facilities where compliance will significantly impact existing trees. In no case will a clear zone of less than eighteen (18) inches be allowed. A clear zone variance must be approved by the City Engineer.

Sub-Section H. Pavement Loading and Design:

Asphalt shall be PG 58-28 Performance Graded Asphalt Cement placed in maximum of four (4) inch lifts. Road base shall be compacted to ninety-five percent (95%) modified proctor.

1) Table 2.1 illustrates the minimum requirements to be used for the roadway structural sections.

TABLE 2.1

MINIMUM STREET CROSS SECTION			
	Asphalt	Road Base	Sub Base
Residential	3"	8"	*
Collector	4"	8"	*
Arterial	6"	8"	*
* The Northwest Area of Highland City or Dry Creek Bench Area, shall have an 18" minimum sub base with an underlying woven geotextile as per APWA Section 02075 on all street cross sections.			

Section 2.06 INTERSECTION DESIGN

The following intersection design criteria shall apply to all intersection designs in the City. Additional design criteria are specified in the Standard Drawings and the American Public Works Association (APWA) Manual of Standard Specifications.

Sub-Section A. Street Alignment and Offsets:

Angular street alignment at an intersection shall be as close to perpendicular as possible. In no case shall an intersecting street be more than 10° from perpendicular. Centerlines of opposing streets should match at the intersection whenever possible. Offsets of up to ten (10) feet may be allowed in a single intersection but separate intersections must have at least one hundred fifty (150) feet of separation.

Sub-Section B. Curb Returns:

Curb returns shall be designed such that there is a smooth transition from one leg of the intersection to another, using vertical curves where grade changes greater than 2% occur. The designer shall include enough information on the plans to demonstrate compliance. In some cases, this requires profiling the top back of curb through the curb returns. Elevations at the PC, PT, and appropriate sub-divided delta (central angle) locations will be required. Curb returns shall have a twenty-four foot (24') radius at TBC.

Sub-Section C. ADA Curb Ramp Design:

Curb ramps shall be designed in accordance with current ADA standards and guidelines, and shall meet the Accessibility Standards found in the Highland City Standard Specifications. The standard drawings also include specific dimensional information.

Sub-Section D. Stop Controlled Grades at Intersections:

Streets that will have stop control at an intersection shall not have a grade slope of greater than three percent (3%) for a distance of fifty (50) feet from the intersecting streets right-of-way.

Sub-Section E. Roundabout Design:

Roundabouts shall be designed in accordance with the U.S. Department of Transportation publication FHWA-RD-00-067 (*Roundabouts: An Informational Guide*). Roundabouts in local streets shall also follow the criteria shown in the standard drawings. The engineer shall submit the circulatory design speeds with the design drawings.

Sub-Section F. Site Distance Triangle:

A clear line of sight must be provided at all intersections. The "Sight Distance Triangle" must be calculated using the stopping "Sight Distance" of the road being intersected. The stopping "Sight Distance" is 200 feet for a Local street, 300 feet for a Collector and 425 feet for an Arterial. The figure below illustrates the required "Sight Distance Triangle" based on the "Sight Distance". Compare to drawing.

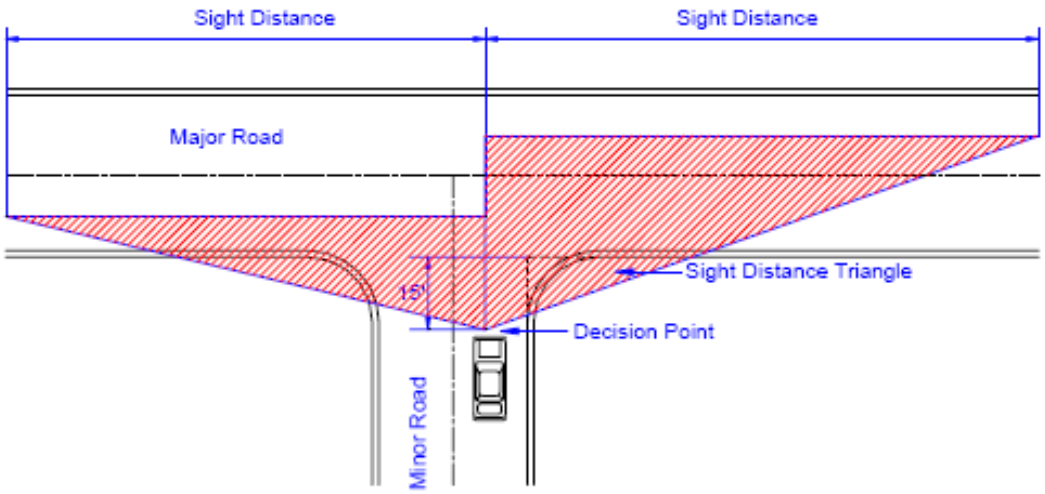

Section 2.07 CITY UTILITY CONDUITS

Four (4) inch gray PVC utility conduits shall be placed in bundles of three (3) at each leg of intersections, at the bulb of cul-de-sacs and every three hundred (300) feet. A single conduit for lighting shall be placed for lighting if conduit bank is not near.

Section 2.08 STREET LIGHTING

Double head type street lights shall be placed at intersections and every three hundred (300) feet on all collector and arterial streets.

Single head type street lights shall be placed at intersections and every three hundred (300) feet and at the end of cul-de-sacs on all residential streets.

Section 2.09 ADDRESSING

The following addressing design criteria shall apply to all addressing of city streets and lots in the City. All addressing shall be reviewed and approved by the City Engineer.

Sub-Section A. Street Addressing:

Street addresses shall have a name and a number ending in zero digits. Only provide street names on the Plat without the street numbers. Provide both the street names and the numbers on the design drawings.

Sub-Section B. Lot Addressing:

Lot addresses shall end in non-zero digits. Corner lots require both addresses for optional siting. Use 6.6 feet per digit to determine lot address. Even numbers on North and East side, and odd numbers on South and West side of the street.

Section 2.10 PARKWAY LANDSCAPING

Landscape plans for parkways shall be stamped be a licensed landscape architect. The design shall include a sprinkler design, with approved materials, and with approved plantings as outlined in the City Ordinances and Development Codes.

DIVISION 3 SEWER DESIGN CRITERIA

Section 3.01 GENERAL

All sanitary sewer design shall comply with Utah Department of Environmental Quality, Division of Water Quality as Administrative Rules for Design Requirements for Wastewater Collection, Treatment and Disposal System, R317-3. The following sewer design criteria shall apply to all gravity sewer system designs in the City. Additional design criteria are specified in the Standard Drawings.

Section 3.02 SEWER PIPE DESIGN

Sub-Section A. Pipe Material:

Gravity sewer pipe and fittings shall be PVC material and conform to ASTM D3034, for diameters from four inch (4") to fifteen-inch (15") and ASTM F679 for eighteen-inch (18") to twenty-seven-inch (27"), with integral bell gasket joints. Rubber gaskets shall be factory installed and conform to ASTM F477. Pipe shall be made of PVC plastic having a cell classification of 12454A or 13364B (with minimum tensile modulus of 500,000 PSI) as defined in ASTM D1784 and shall have a SDR of 35 and minimum pipe stiffness of 46PSI according to ASTM test D2412.

Sub-Section B. Pipe Sizing and Slope:

A Residential Annual Average of 80 gpcd shall be used for sewer main sizing in residential areas which includes infiltration, inflow, and extraordinary flows. Non-residential areas include commercial, industrial, and institutional areas. Non-residential flows shall be determined from average indoor water use. Roughness Coefficient N = 0.013 shall be used for gravity sewer design and C = 120 for force mains.

The minimum sewer pipe shall be eight-inch (8”) diameter and shall not be designed at a grade no flatter than that, which is specified in the table below. If the State guidelines require steeper grades than indicated below, the State guidelines shall apply. The engineer shall coordinate the pipe size with the City Engineer for future design capacities. Any connections to one of TSSD lines require prior approval from TSSD and any applicable fees will be paid for by developer.

8-inch sewer lines	0.0033 foot/foot
10-inch sewer lines	0.0025 foot/foot
12-inch sewer lines	0.0019 foot/foot
15-inch sewer lines	0.0014 foot/foot
18-inch sewer lines	0.0012 foot/foot
21-inch sewer lines	0.0010 foot/foot
24-inch sewer lines	0.0008 foot/foot
Larger than 24-inch	City Engineer’s Approval

Unless otherwise approved and/or required by the City Engineer, sewer lines eight (8) through fifteen (15) inches in diameter shall be designed to flow no more than half-full during peak flow. Sewer lines larger than fifteen (15) inches in diameter shall be designed to flow seven-tenths full.

No sewer main lines are to be laid at less than 0.50% unless approved by city. Maximum sewer main slope not to exceed 12% unless approved by city.

All sewers shall be designed and constructed to give mean velocities of not less than two (2) feet per second at peak design flow, based on Manning’s formula using an n value of .013. Absolute minimum slope allowed shall be those published by the Utah Department of Environmental Quality, Division of

Water Quality as Administrative Rules for Design Requirements for Wastewater Collection, Treatment and Disposal System, R317-3, Table R317-3-2.3 (D)(4)

Top of pipe bury depths shall be between ten (10) and twelve (12) feet below finished grade.

Locator tape shall be installed twenty-four inches (24") above pipe.

Section 3.03 MANHOLE DESIGN

Sub-Section A. Manhole Sizing:

Minimum manhole interior diameter is five-foot (5'). The diameter of the manhole shall be determined by the intersection pipe sizes and the clearances required between the pipes for proper construction. Generally there should be a minimum of twelve inches (12") clear distance between any two connecting pipes.

All manholes and combination boxes shall feature steps made of copolymer polypropylene conforming to ASTM D-4101.

Pipe inverts through a manhole shall have a minimum two-tenths (0.20) fall from the inlet to the outlet when the pipes are greater than 100° apart in alignment. When the pipes are 90° to 100° apart in alignment, three-tenths (0.30) fall will be required. Pipe alignments under 90° will not be allowed and will require the construction of additional manholes.

Sub-Section B. Manhole Spacing and Locations:

Spacing between manholes shall be no more than four hundred (400) feet and placed at all changes of grade, pipe size, alignment, and at intersections unless special approval is granted by the City Engineer.

A manhole must be provided at the end of all piping sections in a development. The manhole must be located as close to the edge of the project as reasonably possible when future adjacent land development is possible. A pipe stub of equivalent pipe diameter shall be placed in the manhole for future connection. The stub shall have a plug installed at the end of the pipe. No service laterals will be allowed in the stub.

Section 3.04 LATERAL CONNECTIONS

Lateral connections directly into a manhole will not be allowed. Wherever possible, buildings shall be discharged to the Sewer Main Line with a gravity flow Sewer Lateral. Sewer Laterals shall conform to the requirements of the Utah County Department of Health Regulations and the Uniform Plumbing Code.

Each unit of separate ownership shall be required to have a separate sanitary Sewer Lateral, unless otherwise approved by the City Council.

Sewer Laterals shall have at least four (4) feet of cover, unless otherwise approved by the City Engineer.

All sewer laterals shall be located ten (10) feet from the lot center line on the downhill side and stamped with "S" on the curb at the lateral location.

Sub-Section A. Gravity Sewer Laterals:

The size of Sewer Laterals shall be determined on the basis of the total fixture units drained by such sewer, in accordance with the Uniform Plumbing Code. The minimum size for gravity Sewer Laterals shall be four (4) inches in diameter. Sewer Laterals shall be run at a uniform slope of not less than 2% grade. Where it is impractical to run the sewer at a 2% grade due to the depth of the Sewer Main Line, Sewer Laterals may be run at 1% grade if approved by the City Engineer. Cleanouts shall be installed at not more

than 100-foot spacing. No more than two (2) bends in excess of 45 degrees will be installed without a cleanout.

Sub-Section B. Pressure Sewer Laterals:

Professional advice should be obtained prior to installing pumping equipment or pressure Sewer Laterals.

In locations where buildings cannot be discharged to the Sewer Main by a gravity flow Sewer Lateral, flows shall be discharged into a tightly covered and vented sump from which the flows shall be pumped, by automatic pumping equipment and discharged into a gravity flow Sewer Lateral, connecting at a cleanout, or the Sewer Main, connecting in a manhole, with an approved restrained coupling(s).

Unless otherwise approved by the City Engineer, pressure Sewer Laterals shall be constructed of HDPE.

The pump shall be designed to exceed the anticipated use requirements. The total maximum system head shall not exceed the pump manufacturer's recommended allowable head for the pump system being proposed.

Pressure Sewer Laterals shall be sized to provide a minimum velocity of 2.0 feet per second at the design pumping rate. Pressure Sewer Laterals shall be designed and constructed on a constant reverse grade.

Section 3.05 SEWER LIFT STATIONS

Sewer lift stations will only be allowed upon written approval by the City Engineer. At least two pumps are required. Each pump shall be designed to exceed the anticipated use requirements. The total maximum system head shall not exceed the pump manufacturer's recommended allowable head for the pump system being proposed.

DIVISION 4 PRESSURE PIPE DESIGN CRITERIA

Section 4.01 GENERAL

The following pressure pipe design criteria shall apply to all pressure pipe designs in the City. Design shall comply with the current applicable AWWA standards and Utah Division of Drinking Water Rules. Additional design criteria are specified in the Standard Drawings. Culinary and pressure irrigation pipe mains shall be eight-inch (8”) diameter minimum.

Section 4.02 CULINARY WATER PIPE DESIGN

Sub-Section A. Pipe Material:

Ductile iron pipe shall conform to all requirements of ANSI/AWWA C151/A21.51, "American National Standard for Ductile Iron Pipe, Centrifugally Cast in Metal Molds or Sand-Lined molds, for Water or Other Liquids." Minimum pressure Class will be 250 for pipes larger than 12-inch diameter. Pipes of 12-inch diameter and smaller shall be pressure Class 350. If thickness class pipe is used, pipes of diameters from 4 inches through 10 inches shall be minimum Class 51 and pipe from 12-inch diameter and larger shall be minimum Class 50.

All main lines shall be in ductile iron. Transmission lines with no services on them may be installed in C900 with approval.

Polyvinyl Chloride (PVC) pipe for the transmission and distribution of water shall be manufactured in accordance with AWWA C900-07, "AWWA Standard for Polyvinyl Chloride (PVC) Pressure Pipe, 4-inch through 12-inch, for Water:" PVC pipe fourteen inches (14”) and larger shall be manufactured in accordance with AWWA C905-10, "AWWA Standard for Polyvinyl Chloride (PVC) Water Transmission Pipe, Nominal Diameters 14-inch through 48-inch." All PVC pipe four-inch (4”) and larger shall be dimension ratio (DR) 18 with a working pressure of 150 psi. The PVC pipe shall have a cast-iron-pipe-equivalent outside diameter. Pipe smaller than four inches (4”) shall be schedule 40 PVC.

Valves shall be located as a cluster in intersection.

Top of pipe bury depths shall be between forty inches (40”) and sixty inches (60”) below finished grade. Any variances due to conflicts must be approved by City Engineer.

Locator tape shall be installed twelve inches (12”) above pipe.

Sub-Section B. Fire Hydrant Spacing:

Fire Hydrants shall be Waterous type and placed on the culinary main side of the street. Fire Hydrants shall be placed in locations that allow for accessibility by the lay of a fire hose of no more than two hundred fifty (250) feet from the hydrant to the most remote point of any structure intended for occupancy and spaced no greater than five hundred (500) feet. Minimum fire hydrant spacing to structures shall be reduced to two hundred (200) feet in cul-de-sacs and dead ends.

Buildings that are to be equipped with sprinkled fire suppression are to have a hydrant within one hundred (100) feet of the “Fire Department Connection” (FDC). Other requirements shall be based on the “International Fire Code” or as specified by the Highland City Fire Marshall.

A concrete pad shall be poured around the hydrant barrel below traffic flange from curb to sidewalk and 18 inches to each side of hydrant with thickness equal to sidewalk.

Sub-Section C. Blow-off Locations:

If a fire hydrant is not located at the end of a cul-de-sac or temporary dead-end street, a blow-off hydrant shall be placed at those locations.

Section 4.03 PRESSURE IRRIGATION PIPE DESIGN

Sub-Section A. Pipe Material:

Polyvinyl Chloride (PVC) pipe for the transmission and distribution of water shall be manufactured in accordance with AWWA C900-07, "AWWA Standard for Polyvinyl Chloride (PVC) Pressure Pipe, 4-inch through 12-inch, for Water:" PVC pipe fourteen inches (14”) and larger shall be manufactured in accordance with AWWA C905-10, "AWWA Standard for Polyvinyl Chloride (PVC) Water Transmission Pipe, Nominal Diameters 14-inch through 48-inch." All PVC pipe four-inch (4”) and larger shall be dimension ratio (DR) 18 with a working pressure of 150 psi. The PVC pipe shall have a cast-iron-pipe-equivalent outside diameter. Pipe smaller than four inches (4”) shall be schedule 40 PVC. Pressure Irrigation pipe shall be purple in color for easy identification.

Valves shall be located in intersections at the extension of the property lines.

Top of pipe bury depths shall be between twenty-four inches (24") and thirty inches (30”) below finished grade. Any variances due to conflicts must be approved by City Engineer.

Tracer wire and locator tape shall be installed on the pipe.

Sub-Section B. Blow-off Locations:

A blow-off shall be placed at the end of all cul-de-sacs and temporary dead-end streets unless an irrigation pipe drain is placed at those locations.

Sub-Section C. Pipe Drainage Facilities:

Pressure irrigation pipe drains must be designed at all low-lying locations that will collect water at the end of the irrigation season. Care should be taken in the design process to assure the fewest number of drains as possible. Highland City must approve the location of all drains. Details of acceptable pipe drains are included in the standard drawings.

Section 4.04 PIPE LOOPING

Circumstances that require a culinary pipe to be placed under a sanitary sewer pipe require special construction. There must be 18” to 36” clear distance between the pipes. The culinary pipe must be in a casing that extends ten (10) feet on each side of the crossing. This also must be approved by the State Division of Drinking Water.

Section 4.05 AIR VALVES

The engineer must give special consideration in the design of a pressure pipe system to include air valves of the appropriate type and location when necessary. Generally, special valves that may need to be designed into the system include vacuum relief valves, air and vacuum valves and combination air valves. Air valves are essential in the design of an expansive system in order to operate effectively. Without the proper application and placement of air valves, pipeline capacity may be reduced. Valves are especially necessary for pressure irrigation systems that are drained annually. In pressure irrigation systems, manual valves that provide air inlet and removal are generally acceptable. The design engineer should work closely with the City Engineer and Public Works Director to determine the most appropriate type of valve.

The following is a description of the application concerning the specified valves:

a) Vacuum Relief Valves shall be of the type that automatically admits large quantities of air to enter a system on negative pressure.
b) Air and Vacuum valves shall be of the type that automatically exhausts large quantities of air during the filling of a pipeline and to close water tight when the water enters the valve and allows air to re-enter during the draining or when a negative pressure occurs. The discharge orifice area shall be equal to or greater than the inlet of the valve.
c) Combination Air Valves shall be of the single housing style that combines the operating features of both an Air/Vacuum and Air Release Valve. The Air/Vacuum portion shall automatically exhaust large quantities of air during the filling of the pipeline and automatically allows air to re-enter the pipeline when the internal pressure of the pipeline approaches a negative value due to column separation, draining of the pipeline, power outage, pipeline break, etc. The Air Release portion shall automatically release small pockets of air from the pipeline while the pipeline is in operation and under pressure.
d) Air Inlet and Removal Valves using manual controls are used to flush air from the pressure irrigation system upon annual filling and emptying. Refer to the Standard Drawings for details.

Section 4.06 THRUST BLOCKING

A Highland City inspector is required to inspect the areas dug out for thrust blocking. The inspector also will be present during installation of the thrust blocking and collect batch tickets at the time of installation.

Section 4.07 PRESSURE TESTING AND DISINFECTING CULINARY WATER MAINS

Ductile iron pipe shall be pressure tested at 200 psi. Pressure testing and disinfection shall conform to AWWA C651-05 (Disinfecting Water Main). A Highland City inspector shall be present for the filling of the pipe and will perform the chlorine test. The inspector shall be present for the flushing, pressure test, and will collect samples to ensure proper disinfection.

Section 4.08 LATERAL CONNECTIONS

Sub-Section A. Culinary Water Service Lateral:

The minimum residential culinary service lateral pipe diameter shall be three-fourths of an inch (3/4”) for residential services (distances exceeding fifty (50) feet in length will require one (1) inch minimum.) The minimum commercial service lateral pipe diameter shall be one and a half inches (1.5”). Service laterals one inch (1”) or smaller shall be installed in Type K soft copper. Service lateral larger than one inch (1”) may be installed in blue poly pipe with a tracer wire. Water service meters shall be located in the park strips.

All culinary water laterals shall be located at the lot centerline and stamped with “W” on the curb at the lateral location.

Sub-Section B. Pressure Irrigation Service Lateral:

Refer to the standard drawings for pressure irrigation service lateral pipe size diameter. The minimum service lateral shall be three-fourths of an inch (3/4”) and purple poly pipe material. One (1) double service shall be provided to every two (2) lots where possible.

All pressure irrigation laterals shall be located in the park-strip at lot lines and stamped with “I” on the curb at the lateral location.

DIVISION 5 STORM DRAINAGE CRITERIA

Section 5.01 GENERAL

The following storm drainage design criteria shall apply to all storm drainage designs in the City that will be maintained by the City of Highland. Additional design criteria are specified in the Standard Drawings and the Highland City Storm Drainage Master Plan. The minimum allowed pipe size for storm drain pipe mains (manhole to manhole) is fifteen-inch (15") diameter. The minimum for tributary piping (curb face inlet to manhole) is fifteen-inch (15") diameter. Storm Drainage should be designed to avoid conflicts with water lines that would require looping of water lines.

Section 5.02 INLET BOXES AND MANHOLES

Sub-Section A. Storm Water Inlets:

Curb face inlets (or an acceptable alternative) must be constructed at all low lying areas. Curb face inlet boxes will serve tributary piping and shall not be used as junction boxes or manholes. If multiple piping is required in a structure using a curb face inlet, a combination box shall be constructed which must include a manhole for access. No inlets shall be allowed at the bottom of an ADA ramp structure or in a designated pedestrian path.

Sub-Section B. Manholes:

Minimum manhole interior diameter is four-foot (4'). The diameter of the manhole shall be determined by the intersection pipe sizes and the clearances required between the pipes for proper construction. Generally there should be a minimum of twelve inches (12") clear distance between any two connecting pipes. Inside a rectangular type box, a minimum of 6 inches (6") clear distance between the pipe and a side wall is preferred.

Spacing between manholes shall be no more than four hundred (400) feet unless special approval is granted by the City Engineer.

All manholes and combination boxes shall feature steps made of copolymer polypropylene conforming to ASTM D-4101.

Sub-Section C. Pipe Material:

Storm drain pipe material shall be reinforced concrete pipe. All reinforced concrete pipe used for storm drain construction shall be of the rubber gasket type, bell and spigot joint design, conforming to the requirements of the latest revision of ASTM Designation C76 (minimum Class III.) Pipe class shall be as shown on the Improvement Drawings. The minimum joint length of all pipes provided shall be 7 1/2 feet.

Sub-Section D. Storm Water Treatment:

All new land development will require provisions for storm water treatment before the water is allowed to discharge into the existing City system, ponds, or sumps. A design that will separate oils and particulates from the discharged water will have to be approved by the City Engineer. The treatment facility must be easily accessible and maintainable without unreasonable effort.

Sub-Section E. Sumps:

Sump interior diameter shall be six-feet (6') with a nine-foot (9') minimum wall section. Pre-treatment shall be required for flows before discharge into sumps. Sumps shall be placed as required by storm drain calculations and where discharge into the existing city system is not available. Additional design criteria

are specified in the Standard Drawings. A licensed geotechnical engineer will be required to establish a percolation rate to verify sump design requirements.

Section 5.03 MULTIPLE-LOT STORM DRAINAGE CALCULATIONS

The following information shall be included in the storm drainage calculations for multiple-lot development.

Sub-Section A. Hydrologic (Flow) Calculations:

1) A map showing drainage sub-basins and the piping system.
2) Cumulative peak flow calculations for each sub-basin (submit all input data, calculations and results).

Sub-Section B. Hydraulic (Inlet and Pipe) Calculations:

1) Capacity calculations for each segment of the pipe system.
2) Calculations demonstrating that flow rates in streets do not exceed maximums before being caught in storm drain inlets. "Section 5.07, Sub-Section C: Inlet Spacing" dictates the criteria required for allowable water spread.
3) Calculations demonstrating that inlets are sufficiently long to capture peak design flows.

Sub-Section C. Detention Calculations:

1) Detention volume requirement which includes an analysis that identifies the storm whose duration creates the greatest detention volume requirement, given storm duration and stage storage curve and outlet discharge curve.
2) Orifice calculations illustrating that the maximum release rate is not exceeded.

Section 5.04 COMMERCIAL SITE STORM DRAINAGE CALCULATIONS

The following information shall be included in the storm drainage calculations for commercial site property development.

Sub-Section A. Hydrologic (Flow) Calculations:

1) Peak flow calculations for the site (submit all input data, calculations and results).

Sub-Section B. Hydraulic (Inlet and Pipe) Calculations:

1) Capacity calculations for each segment of the pipe system.

Sub-Section C. Detention Calculations:

1) Detention volume requirement-an analysis that identifies the storm whose duration creates the greatest detention volume requirement, given storm duration and stage storage curve and outlet discharge curve.
2) Stage storage curve - generally required only on large detention basins.
3) Outlet discharge curve - generally required only on large detention basins.
4) Orifice calculations illustrating that the maximum release rate is not exceeded.

Section 5.05 LANDSCAPED STORM DETENTION BASIN REQUIREMENTS

Storm water must be detained such that the peak flow rate released from the site does not exceed 0.10 cubic feet per second per acre of development (cfs/acre). Detention basins must have vehicular access for maintenance and will not be allowed in the backyards of single family residences. The following limitations apply to detention basins:

a) The side slopes of the basin may not be steeper than 3:1 unless special circumstances warrant a change. Any change must be approved by the City Engineer. The bottom of the detention basin must slope toward the drain.
b) An oil water separator is required on the inlet to the pond.
c) Within 10 feet of the outlet, the slope of the basin bottom must not be flatter than 5% unless a concrete apron is constructed around the outlet.
d) Excluding areas within 10 feet of the outlet, the maximum allowable depth of water in the basin is 3 feet. An additional one (1) foot of freeboard must be constructed on all basins.
e) Storm drain pipes are to be continuous through detention areas to allow low flows to proceed through the storm drainage system without having to come to the surface. These flows must still pass through the outlet restriction that limits runoff rates.
f) Basins are to be designed such that water does not run into them after storm water reaches a maximum depth (unless a free flowing overflow is provided)—this can usually be controlled by the elevation of an inlet box in the street adjacent to the basin.
g) Basins are to be designed such that when runoff exceeds design values or when restrictions plug, excess storm water will be directed to the street system or bypass the restriction by entering the piped system via a free flowing overflow.
h) A basin may be designed for dual use, but uses other than the detention of storm water must be approved by the City Engineer.
i) In cases where the basin detains water from and is part of a project controlled by a "Home Owners Association" (HOA), the HOA will be responsible to maintain the operation, landscaping and irrigation sprinkling of the basin.

Section 5.06 HARD SURFACE STORM DETENTION STORAGE REQUIREMENTS

Storm water may be detained above ground on hard surface areas if the depth does not exceed a maximum of one-foot (1'). If property is not available for a landscaped detention basin or cannot meet the one-foot depth criteria, storm water shall be detained underground in an approved underground system. Storm water must be detained such that the peak flow rate released from the site does not exceed 0.10 cubic feet per second per acre of development (cfs/acre). Underground storage designs should be discussed with the City Engineer before submittal. The following limitations apply to underground detention storage:

a) Basins are to be designed such that when runoff exceeds design values or when restrictions plug, excess storm water will be directed to the street system or bypass the restriction by entering the piped system via a free flowing overflow.
b) The private property owner benefiting from the hard surface or underground detention storage will be responsible to maintain the operation of the system.

Section 5.07 STORM WATER QUANTITY CRITERIA AND DESIGN GUDELINES

The following storm drainage criteria and design guidelines apply to all storm drainage plans in Highland and shall be used in storm drainage calculations. The City Engineer has authority to modify the criteria and guidelines as needed to meet changing or unusual needs or conditions.

Sub-Section A. Design Storm:

Precipitation and Frequency Data can be found online at NOAA 14 (http://hdsc.nws.noaa.gov/hdsc/pfds/sa/ut_pfds.html)

i. Design piping system for a 10 year storm
ii. Design detention, control point of discharge, open channels and the flooding hazard of a 100 year storm

Sub-Section B. Runoff Coefficients:

Highland City requires the design engineer to calculate a composite runoff coefficient based on surface type and associated runoff coefficient, weighted by the area of each surface type.

Sub-Section C. Inlet Spacing:

Determined by the Highland City Storm Water Design Criteria and at the direction or discretion of the City Engineer.

Two criteria must be met.

1) Spread of water in the street:
   Storm water must be delivered from the street into an underground piped system when the spread of water in the street covers the outside 7 feet of asphalt on a local street, the outside 2 feet on a Collector street and the outside 2 feet on an Arterial street. This will leave 12-feet of unsubmerged asphalt for local streets (that have 26 feet of asphalt), 10-feet in each direction of unsubmerged asphalt for Collector streets (that have 24 feet of asphalt) and 22-feet in each direction of unsubmerged asphalt for Arterial streets (that have 48 feet of asphalt).
2) Gutter velocity:
   Water must be delivered from the street into an underground piped system when the velocity of water in the deepest part of the gutter reaches 10 feet per second (as a safety consideration).

Both of these requirements are a function of street slope and storm water flow rate. Storm water must be delivered from the street to storm drains when flows reach amounts shown in the following graphs. This means that for a given longitudinal street slope, flows on the street surface must be delivered into the underground piped system when they reach the amount indicated on the graph by the solid line.

GRAPH FOR LOCAL SUBDIVISION STREETS

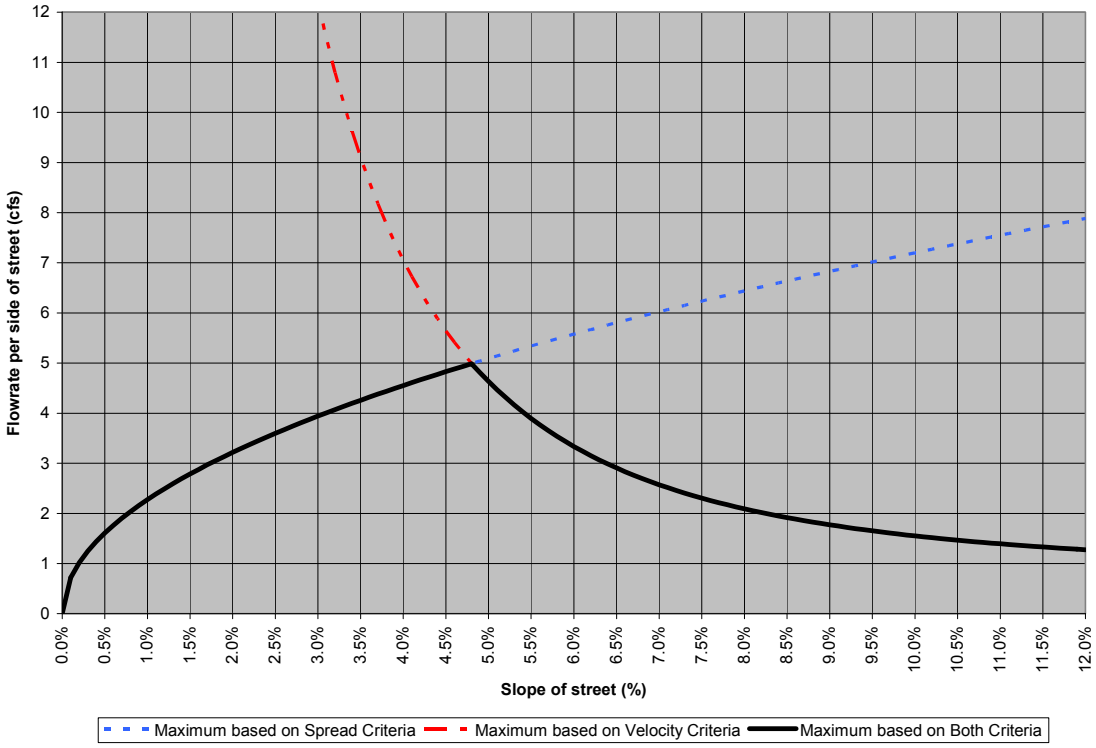

GRAPH FOR COLLECTOR AND ARTERIAL STREETS

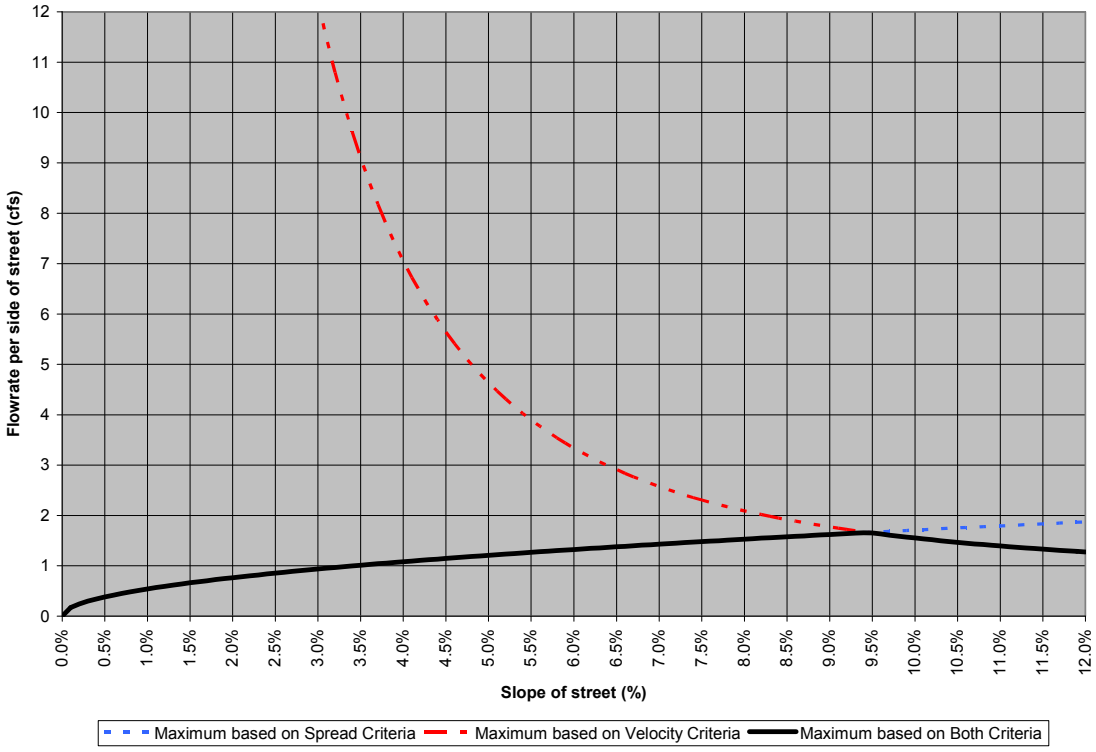

Note: The spread of water in the street is calculated using the Manning equation in the form developed by Izzard, with a roughness coefficient of 0.013 and the standard street cross section. The velocity criteria is based on the velocity at the deepest part of the gutter with the Manning Equation, with a roughness coefficient of 0.013, and using a depth at a point six inches from the face of the curb as the hydraulic radius.

Sub-Section D. Inlet Capacity:

The designer is to assume 50% blockage of inlets when considering storm drain inlet capacity.

Sub-Section E. UPDES and Storm Water Pollution Prevention Plan:

All construction sites, which disturb an area of 1 acre or more, currently need a UPDES permit from the State of Utah. As a condition of the permit, a Stormwater Pollution Prevention Plan (SWPPP) must be developed and implemented as outlined at the Department of Environmental Quality website (http://www.waterquality.utah.gov/UPDES/stormwater.htm). The permit requires the responsible party to control and eliminate storm water pollution sources through the development and implementation of a Storm Water Pollution Prevention Plan. In the Plan, you identify possible sources of storm water pollutants then select Best Management Practices (BMPs) to reduce or eliminate their impacts. BMPs are the most important element of this Plan. The aim is to control storm water sediment and erosion to the maximum extent practicable. Controls can encompass a wide range of structural and non-structural options. The SWPPP shall address each of the following items:

1. construction environmental summary
2. clearing limits
3. construction access
4. storm water detention
5. sediment controls
6. soil stabilization
7. slope protection
8. drain inlet protection
9. storm water outlet protection
10. spill prevention and response
11. storm water treatment
12. BMP maintenance
13. project management

The *DWQ* finds the owner, developer, or project instigator and controller (the entity responsible for obtaining funding, procuring initial contracts or agreements, selecting [or assuming the position of] a general contractor, and that has control over site specifications) as the ultimate party responsible for pursuing permit procurement and compliance.

DIVISION 6 LAND DEVELOPMENT CRITERIA

Section 6.01 GENERAL

The following land development criteria shall apply to all designs for land development in Highland. It will be necessary to refer to the current general plan and zoning plan for correct land use designations. Design shall comply with the current Highland City Zoning Ordinance and the Highland City Subdivision Ordinance. Additional design criteria are specified in the Standard Drawings.

Section 6.02 PROJECT IMPACT ON ADJACENT PROPERTIES

The design of public improvement and utility projects shall evaluate the project impact to adjacent private and public property. The evaluation shall include mitigation measures for right of way acquisition, public utility easements, and construction easements. The design engineer shall give consideration to traffic and pedestrian safety, accessibility and storm water surface flows that may have an impact on all adjacent properties.

The design of the new development must not create a non-conforming use out of a neighboring parcel. For example, if a pre-existing lot designed to function as an interior lot will change to a corner lot because of the design of the new development, additional property may need to be deeded to that lot to insure it is in conformance to the current zoning ordinance for a corner lot.

Section 6.03 DESIGN CONSIDERATIONS TO PRESEVE NATURAL FEATURES AND MITIGATE HAZARDOUS CONDITIONS

Sub-Section A. Natural Features:

The design of public improvements shall preserve the natural features such as natural drainage, wetlands, existing native vegetation and wild life habitat where applicable. The Applicant(s) or his representative shall delineate the location of such natural feature when submitting concept plans or preliminary design drawings for all public improvement projects. The design engineer shall be responsible to incorporate all natural features identified by City Staff reviews and shall be required to notify and get approval from all state and federal agencies that control the natural features.

Sub-Section B. Hazardous Conditions:

Land subject to hazardous conditions such as wetlands, surface fault rupture, debris flow, rock fall, landslides, soil liquefaction, shallow water table, floods, and polluted or non-potable water supply shall be identified and shall not be developed until the hazards have been preserved or will be mitigated during development process and will appear on construction design plans. The approval of a subdivision plat or construction drawings do not terminate the responsibly of the design engineer in using standard duty of care in the investigation and design for the hazardous conditions associated with the project. The design engineer shall be required to notify and get approval from all state and federal agencies that control the preservation or mitigation processes.

Section 6.04 IDENTIFICATION OF EXISTING EASEMENTS AND RIGHTS OF WAY

The design engineer shall identify all easements and rights of way that exist on the subject property that is to be developed. Sufficient investigation and agreements must take place to illustrate to the City the status of all easements and rights of way on the property. These easements and rights of way must be illustrated on the appropriate drawings and in a clear manner.

STANDARD DRAWINGS
2015

HIGHLAND CITY

STANDARD DRAWINGS

TABLE OF CONTENTS

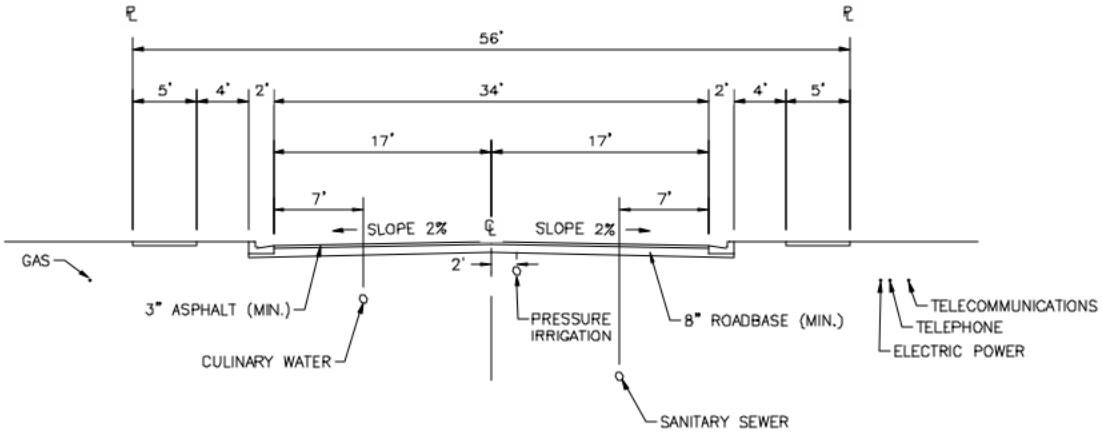

56' STREET CROSS-SECTION
STANDARD SUBDIVISION STREET
LOOKING NORTH OR EAST
SCALE: NTS

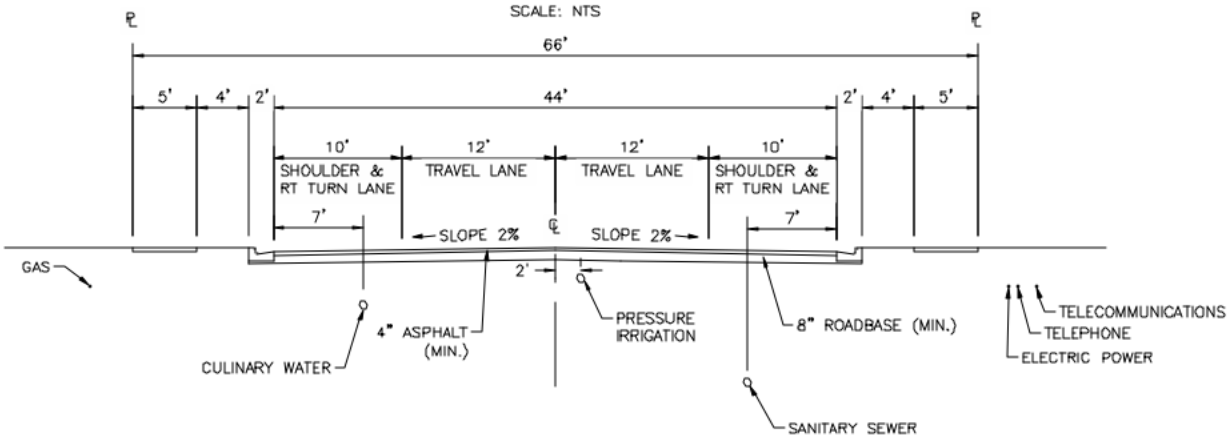

66' STREET CROSS-SECTION
TWO LANE MINOR COLLECTOR
LOOKING NORTH OR EAST
SCALE: NTS

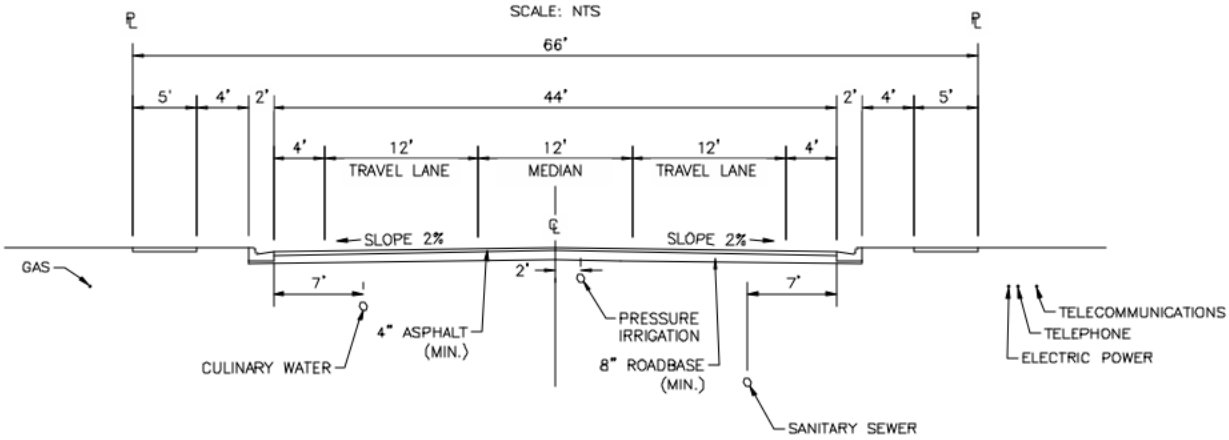

66' STREET CROSS-SECTION
THREE LANE MINOR COLLECTOR
LOOKING NORTH OR EAST
SCALE: NTS

NOTES:

1. WHENEVER POSSIBLE, CULINARY WATER LINES SHALL BE INSTALLED ON THE NORTH AND WEST SIDE OF THE STREET.
2. MANHOLES AND VALVES SHALL BE ADJUSTED OUT OF TIRE TRAVEL LANE.
3. FIRE HYDRANTS SHALL BE LOCATED EVERY 400 FEET AND ON THE SAME SIDE AS THE CULINARY WATER LINES OR AS APPROVED BY THE CITY.
4. REQUIRED UTILITY PIPE SIZES AS FOLLOWS:
   CULINARY WATER – 8" MIN
   PRESSURE IRRIGATION – 8" MIN
   SANITARY SEWER – 8" MIN
   STORM DRAIN – 15" MIN
5. REQUIRED COVER OVER UTILITY LINES AS FOLLOWS:
   CULINARY WATER – 48" TO 60"
   PRESSURE IRRIGATION – 24" TO 36"
   SANITARY SEWER – 10' TO 12'
   STORM DRAIN – PER DESIGN
   ALL OTHERS – PER UTILITY

NO.	REVISION DESCRIPTION	BY	APR.	DATE

FILE: HIGHLAND STD DRAWING
DRAWN BY: JMM
DESIGN BY: CRW
CHECKED BY: TMT
LAST UPDATED: 3/4/2015

HIGHLAND CITY
PUBLIC WORKS AND ENGINEERING

MINOR STREET CROSS SECTIONS

STD DWG #
ST-01

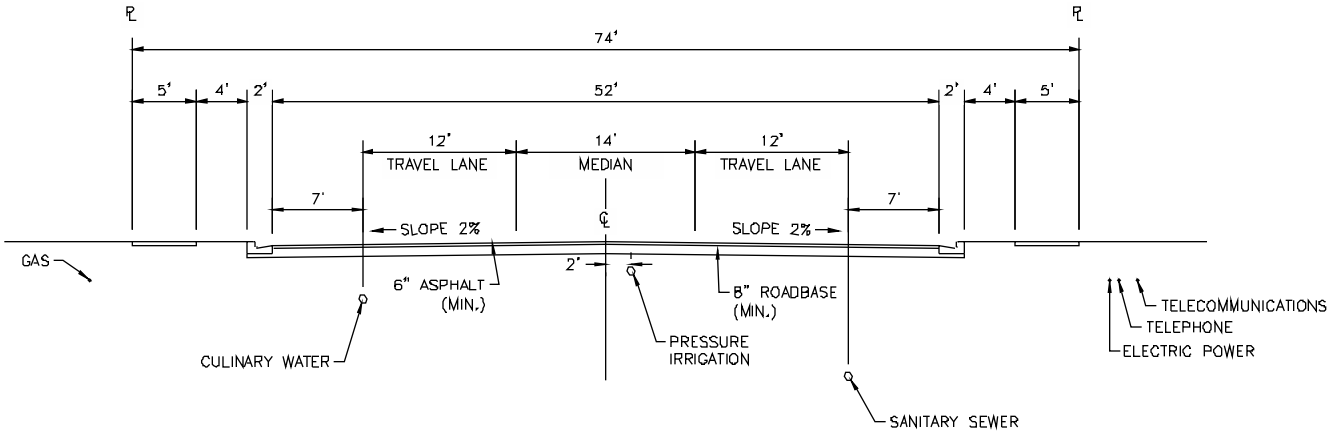

74' STREET CROSS-SECTION
THREE LANE MAJOR COLLECTOR
LOOKING NORTH OR EAST
SCALE: NTS

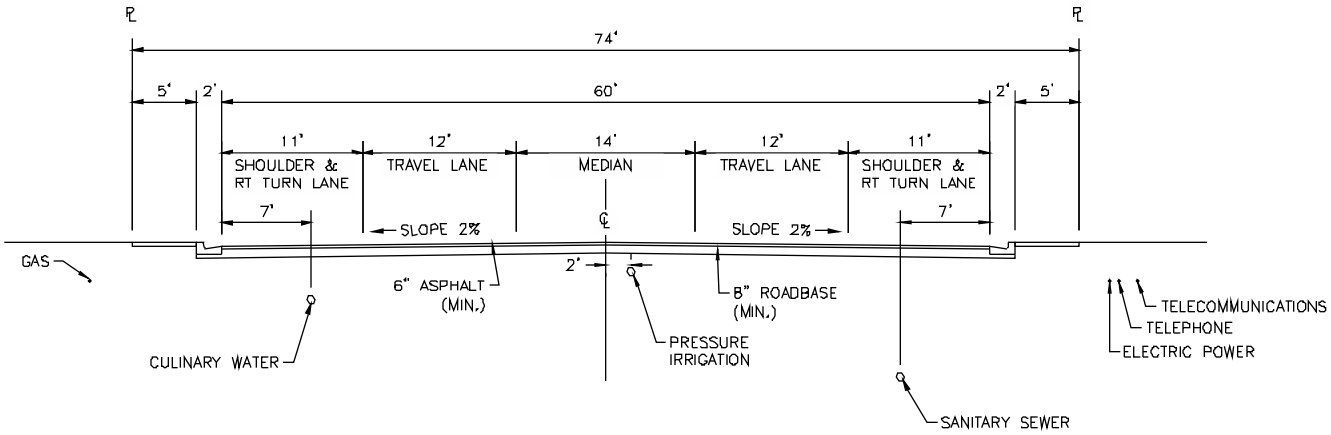

74' STREET CROSS-SECTION
THREE LANE MAJOR COLLECTOR AT INTERSECTIONS
(NO PARKING PERMITTED WITHIN 300' OF THE INTERSECTION)
LOOKING NORTH OR EAST
SCALE: NTS

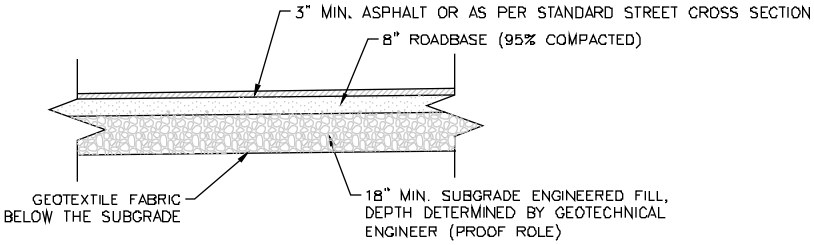

NORTHWEST AREA ROAD PAVEMENT SECTION
SCALE: NTS

NOTES:

1. WHENEVER POSSIBLE, CULINARY WATER LINES SHALL BE INSTALLED ON THE NORTH AND WEST SIDE OF THE STREET.
2. MANHOLES AND VALVES SHALL BE ADJUSTED OUT OF TIRE TRAVEL LANE.
3. FIRE HYDRANTS SHALL BE LOCATED EVERY 400 FEET AND ON THE SAME SIDE AS THE CULINARY WATER LINES OR AS APPROVED BY THE CITY.
4. REQUIRED UTILITY PIPE SIZES AS FOLLOWS:
   CULINARY WATER – 8" MIN
   PRESSURE IRRIGATION – 8" MIN
   SANITARY SEWER – 8" MIN
   STORM DRAIN – 15" MIN
5. REQUIRED COVER OVER UTILITY LINES AS FOLLOWS:
   CULINARY WATER – 48" TO 60"
   PRESSURE IRRIGATION – 24" TO 36"
   SANITARY SEWER – 10' TO 12'
   STORM DRAIN – PER DESIGN
   ALL OTHERS – PER UTILITY

NO.	REVISION DESCRIPTION	BY	APR.	DATE

FILE: HIGHLAND STD DRAWINGS
DRAWN BY: JMM
DESIGN BY: CRW
CHECKED BY: TMT
LAST UPDATED: 7/16/2015

HIGHLAND CITY
PUBLIC WORKS AND ENGINEERING

MAJOR STREET CROSS SECTIONS

STD DWG #
ST-02

Plot Date: 7/16/2015 9:41 AM Plotted By: Chris Wilson
Date Created: 1/21/2015 \\OREMFILES\PUBLIC\PROJECTS\JUB\HIGHLAND\50-14-031 - HIGHLAND - FY 2013-2014 GENERAL SERVICES\HIGHLAND CITY\STD DWGS\CAD\HIGHLAND STD DRAWINGS.DWG

NOTE:
CONTRACTION JOINTS EVERY 10' MAXIMUM AND EXPANSION JOINTS EVERY 50' MAXIMUM.

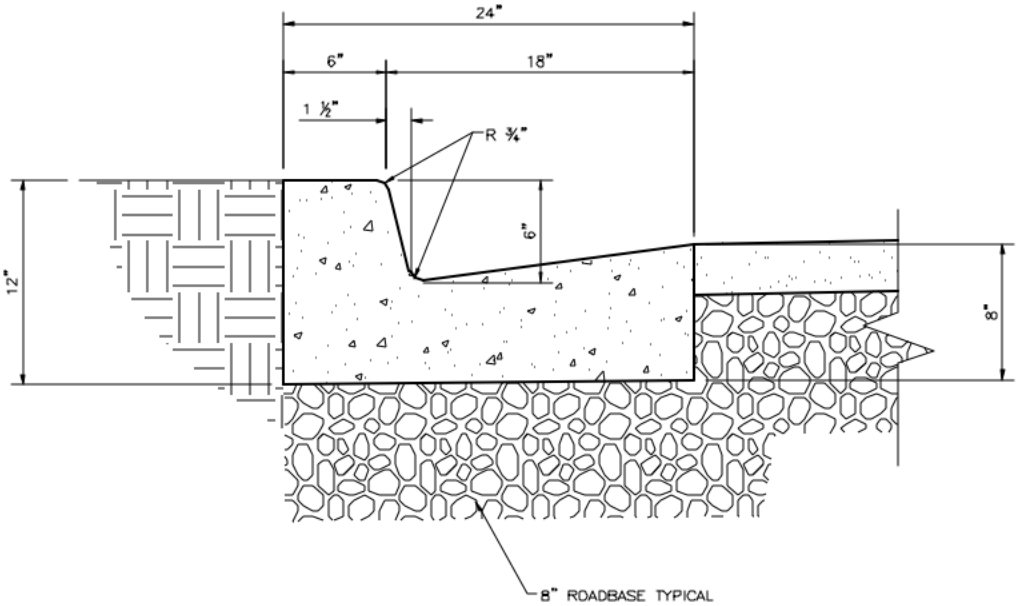

24" CURB AND GUTTER DETAIL
SCALE: NTS

STATEMENT OF USE
THIS DOCUMENT AND ANY ILLUSTRATIONS HEREON ARE PROVIDED AS STANDARD CONSTRUCTION DETAILS WITHIN HIGHLAND CITY. DEVIATION FROM THIS DOCUMENT REQUIRES APPROVAL OF HIGHLAND CITY. HIGHLAND CITY CORP. CAN NOT BE HELD LIABLE FOR MISUSE OR CHANGES REGARDING THIS DOCUMENT.

NO.	REVISION DESCRIPTION	BY	APR.	DATE

FILE: HIGHLAND STD DRAWING
DRAWN BY: JMM
DESIGN BY: CRW
CHECKED BY: TMT
LAST UPDATED: 2/9/2015

HIGHLAND CITY

HIGHLAND CITY
PUBLIC WORKS AND ENGINEERING

CURB AND CUTTER DETAIL

STD DWG #
ST-03

Plot Date: 2/9/2015 2:01 PM Plotted By: Chris Wilson
Date Created: 1/21/2015 \\DREMFILES\PUBLIC\PROJECTS\JUB\HIGHLAND\50-14-031 HIGHLAND FY 2013-2014 GENERAL SERVICES\HIGHLAND CITY STD DWGS\CAD\HIGHLAND STD DRAWINGS.DWG

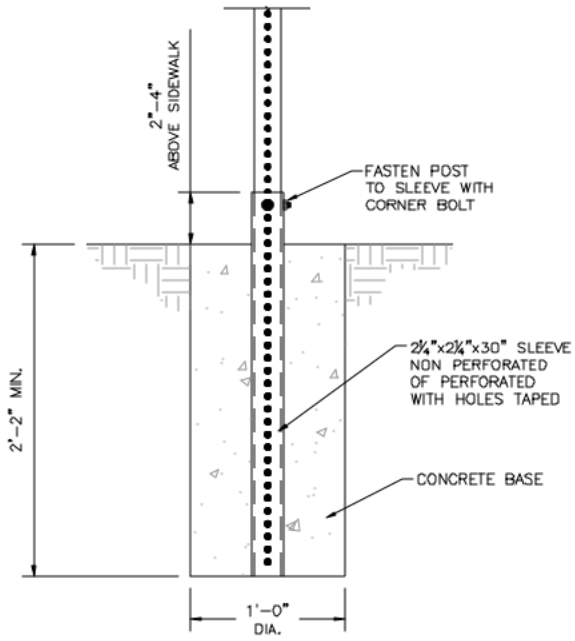

GROUND INSTALLATION DETAIL
(W/ONE PIECE BREAKAWAY ANCHOR)
SCALE: NTS

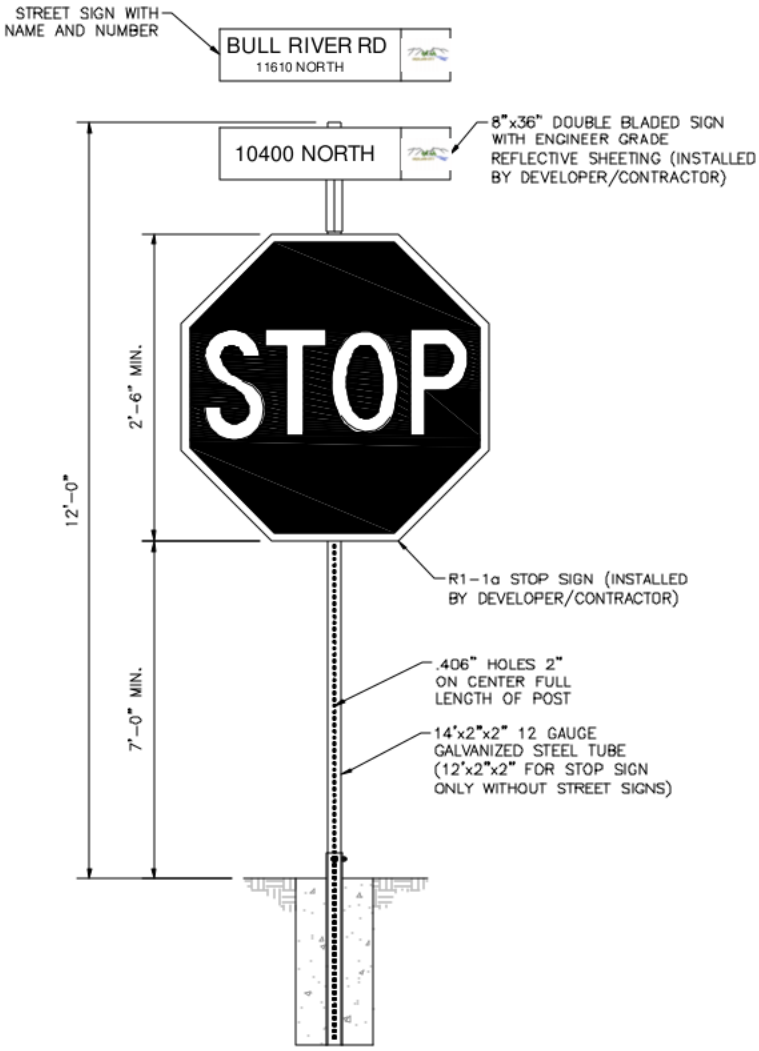

TYPICAL STREET/STOP SIGN INSTALLATION
SCALE: NTS

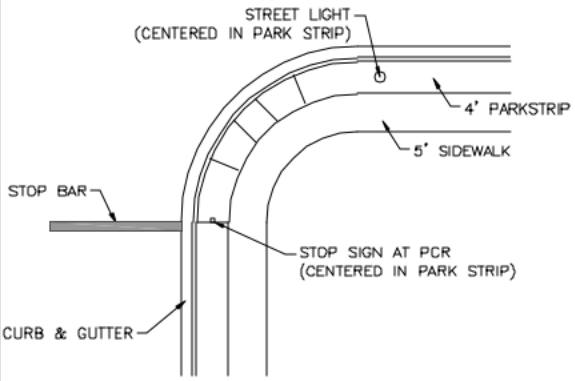

TYPICAL STREET/STOP SIGN AND LIGHT LOCATION PLAN VIEW
SCALE: NTS

NOTES:

1. STREET SIGN SHALL BE 8"x36" DOUBLE BLADED WITH HIGHLAND LOGO. IF THE STREET HAS A NAME, THE NAME SHALL BE PLACED ABOVE IN LARGE LETTERS AND THE NUMBER BELOW IN SMALL LETTERS. (INSTALLED BY DEVELOPER/CONTRACTOR)
2. ALL STOP SIGNS SHALL BE TYPE 9 "DIAMOND GRADE".
3. CONTRACTOR/DEVELOPER SHALL COORDINATE STAKING LOCATION WITH PUBLIC WORKS REPRESENTATIVE.

NO.	REVISION DESCRIPTION	BY	APR.	DATE

FILE: HIGHLAND STD DRAWING
DRAWN BY: JMM
DESIGN BY: CRW
CHECKED BY: TMT
LAST UPDATED: 2/9/2015

HIGHLAND CITY

HIGHLAND CITY
PUBLIC WORKS AND ENGINEERING

STOP SIGN DETAIL

STD DWG #
ST-04

Plot Date: 2/9/2015 2:01 PM Plotted By: Chris Wilson
Date Created: 1/21/2015 \\DREMFILES\PUBLIC\PROJECTS\JUB\HIGHLAND\50-14-031 - HIGHLAND - FY 2013-2014 GENERAL SERVICES\HIGHLAND CITY STD DWGS\CADD\HIGHLAND STD DRAWINGS.DWG

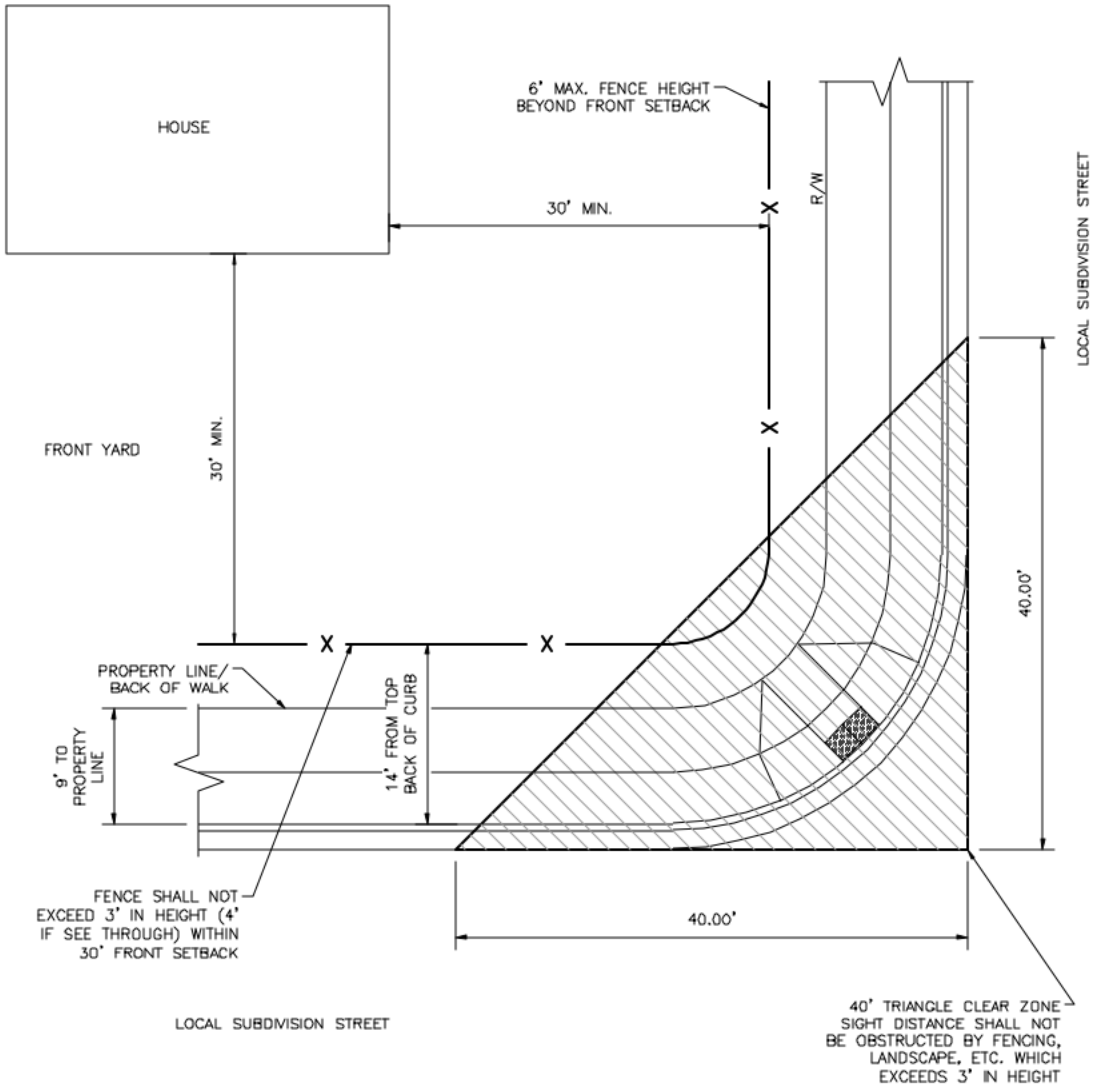

SIGHT TRIANGLE
SCALE: NTS

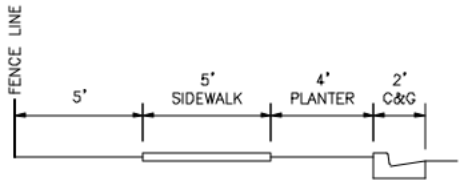

TYPICAL CROSS SECTION LOCAL STREETS
SCALE: NTS

STATEMENT OF USE
THIS DOCUMENT AND ANY ILLUSTRATIONS HEREON ARE PROVIDED AS STANDARD CONSTRUCTION DETAILS WITHIN HIGHLAND CITY. DEVIATION FROM THIS DOCUMENT REQUIRES APPROVAL OF HIGHLAND CITY. HIGHLAND CITY CORP. CAN NOT BE HELD LIABLE FOR MISUSE OR CHANGES REGARDING THIS DOCUMENT.

NO.	REVISION DESCRIPTION	BY	APR.	DATE

FILE: HIGHLAND STD DRAWING
DRAWN BY: JMM
DESIGN BY: CRW
CHECKED BY: TMT
LAST UPDATED: 2/9/2015

HIGHLAND CITY

HIGHLAND CITY
PUBLIC WORKS AND ENGINEERING

SITE TRIANGLE DETAIL

STD DWG #
ST-05

Plot Date: 2/9/2015 2:01 PM Plotted By: Chris Wilson
Date Created: 1/21/2015 \\DREMFILES\PUBLIC\PROJECTS\JUB\HIGHLAND\50-14-031 - HIGHLAND - FY 2013-2014\GENERAL\SERVICES\HIGHLAND CITY\STD DWGS\CADD\HIGHLAND STD DRAWINGS.DWG

GENERAL NOTES:

1. THE PARKWAY IS DESIGNED AS A 29 FOOT WIDE STRIP WITH A 5 FOOT MEANDERING SIDEWALK, LANDSCAPING AND FENCE.

2. THE LENGTH OF THE PARKWAY WILL BE SOD OR PLANTED GRASS. THE TREES WILL BE SPACED AN AVERAGE OF 30 FEET APART AND NO CLOSER THAN7.5 FEET FROM THE CURB OR THE FENCE. EACH TREE MUST HAVE A 24 INCH CEMENT MOW RING FOR MAINTENANCE. THIS WILL ALLOW FOR MOWING EQUIPMENT TO MANEUVER AROUND TRESS.

3. ALL TREES WILL BE AT LEAST 2 INCH CALIPER AND BE PROPERLY STACKED. TREES WILL BE GUARANTEED BY THE DEVELOPER FOR 18 MONTHS AFTER PLANTING. TREE TYPES ARE TO BE APPROVED AS ON THE CITY TREE COMMITTEE LIST. ANY SUBSTITUTES MUST BE APPROVED BY HIGHLAND CITY.

4. THE BACK SIDE OF THE PARKWAY SHALL HAVE A 6 FOOT HIGH QUALITY FENCE CONSTRUCTED OF BRICK, PRE-CAST CONCRETE, WROUGHT IRON, OR BLOCK APPROVED BY THE CITY.

5. SIDEWALK SHOULD BE INSTALLED WITH GRADUAL CURVES IN A RANDOM, LESS STRUCTURED FORMAT.

6. THE ENTRANCE WAYS TO SUBDIVISIONS WILL BE BORDERED BY 20 FOOT BY 15 FOOT PLANTER AREAS WITH NUMEROUS TREES, SHRUB, ROCKS AND GROUND COVER. SUCH ENTRANCE WAYS SHALL CONFORM TO THE CLEAR SIGHT REQUIREMENTS WITH VEGETATION IN THE CLEAR SIGHT ARE NOT CAPABLE OF GROWING OVER 2 FEET IN HEIGHT.

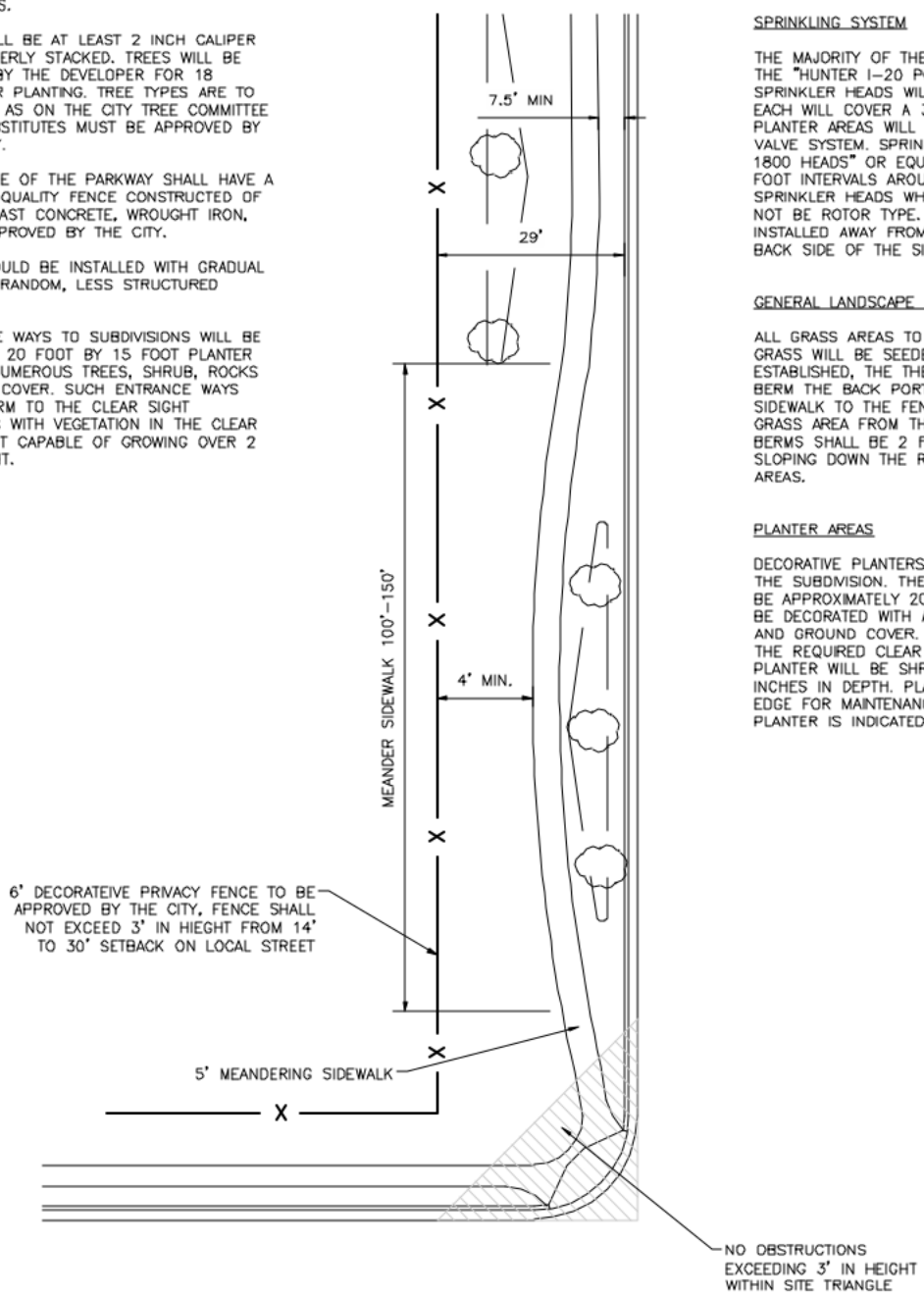

PARKWAY LANDSCAPING DETAIL PLAN

THIS PLAN WILL BE SUBMITTED B THE DEVELOPER AT THE TIME OF PRELIMINARY SUBDIVISION APPROVAL AND WILL INCLUDE THE FOLLOWING:

1. THE PROPOSED LOCATION OF TREES WITH THE EXACT LOCATION TO BE APPROVED BY THE CITY INSPECTOR AT THE TIME OF PLANTING.
2. FENCE DESIGN.
3. SIDEWALK DESIGN.
4. TOPOGRAPHY OF PARKWAY.
5. PLANTER AREA DESIGN.

SPRINKLING SYSTEM

THE MAJORITY OF THE PARKWAY WILL BE WATERED WITH THE "HUNTER I-20 POP-UP HEAD", OR EQUIVALENT. SPRINKLER HEADS WILL BE SPACED AT 30 FOOT INTERVALS. EACH WILL COVER A 30 FOOT ARC.
PLANTER AREAS WILL BE CONTROLLED BY A SEPARATE VALVE SYSTEM. SPRINKLER HEADS WILL BE "RAIN BIRD 1800 HEADS" OR EQUIVALENT. SPACING WILL BE AT 15 FOOT INTERVALS AROUND THE PLANTERS.
SPRINKLER HEADS WHICH BACK ONTO THE CURB SHALL NOT BE ROTOR TYPE. ALL VALVE BOXES SHALL BE INSTALLED AWAY FROM THE CURB, PREFERABLY ON THE BACK SIDE OF THE SIDEWALK.

GENERAL LANDSCAPE DESIGN

ALL GRASS AREAS TO BE HYDRO SEEDED OF SOD. THE GRASS WILL BE SEEDED FIRST AND AFTER GROWTH IS ESTABLISHED, THE THE TREES WILL BE PLANTED.
BERM THE BACK PORTION OF THE GRASS AREA FROM THE SIDEWALK TO THE FENCE AND FRONT PORTION OF THE GRASS AREA FROM THE SIDEWALK TO THE CURB. THE BERMS SHALL BE 2 FEET HIGH IN THE WIDE AREAS AND SLOPING DOWN THE RELATIVELY FLAT BERM IN THE NARROW AREAS.

PLANTER AREAS

DECORATIVE PLANTERS ARE PLANNED AT ALL ENTRANCES TO THE SUBDIVISION. THE BASIC SIZE OF THE PLANTERS WILL BE APPROXIMATELY 20 FOOT BY 15 FOOT AND EACH WILL BE DECORATED WITH A VARIETY OF TREES, SHRUBS, ROCKS, AND GROUND COVER. VEGETATION MAY NOT INFRINGE ON THE REQUIRED CLEAR AREA. GROUND COVER WITHIN THE PLANTER WILL BE SHREDDED BARK APPROXIMATELY 2 INCHES IN DEPTH. PLANTERS MUST HAVE A CEMENT MOW EDGE FOR MAINTENANCE. THE SUGGESTED DESIGN OF THE PLANTER IS INDICATED IN THE OUTLINE SPECIFIED ABOVE.

NO.	REVISION DESCRIPTION	BY	APR.	DATE

FILE: HIGHLAND STD DRAWING

DRAWN BY: JMM

DESIGN BY: CRW

CHECKED BY: TMT

LAST UPDATED: 4/21/2015

HIGHLAND CITY
PUBLIC WORKS AND ENGINEERING

PARKWAY LANDSCAPE DETAIL

STD DWG #

ST-06

Plot Date: 4/22/2015 3:56 PM Plotted By: Chris Wilson
Date Created: 1/21/2015 \\CREMFILES\PUBLIC\PROJECTS\JUB\HIGHLAND\50-14-031 - HIGHLAND - FY 2013-2014 GENERAL SERVICES\HIGHLAND CITY STD DWGS\CADD\HIGHLAND STD DRAWINGS.DWG

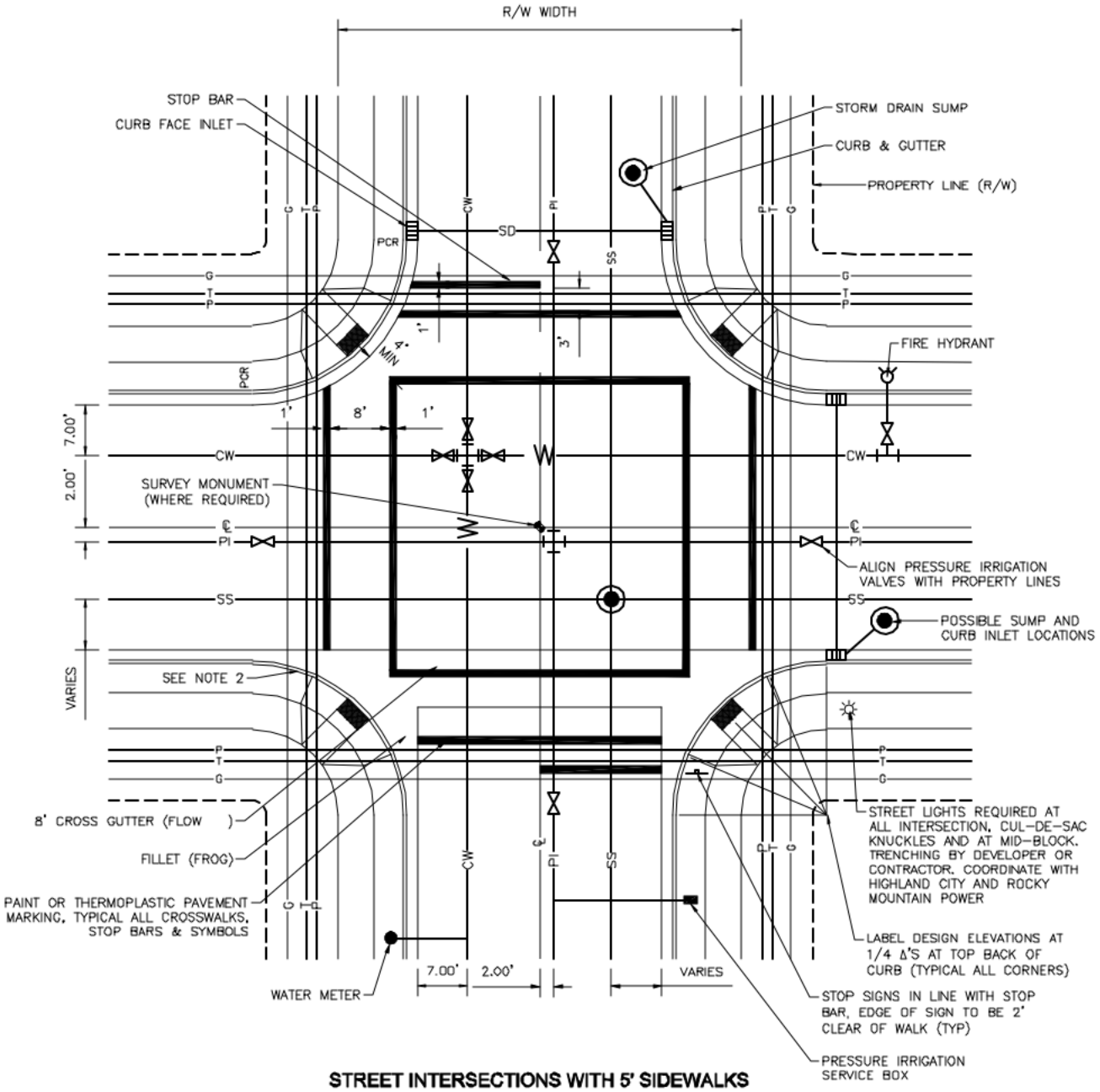

STREET INTERSECTIONS WITH 5' SIDEWALKS

SCALE: NTS

NOTE:

1. CROSS GUTTERS ARE NOT PERMITTED WHERE SURFACE WATER CAN BE PICKED UP IN A STORM DRAIN.

STATEMENT OF USE

THIS DOCUMENT AND ANY ILLUSTRATIONS HEREON ARE PROVIDED AS STANDARD CONSTRUCTION DETAILS WITHIN HIGHLAND CITY. DEVIATION FROM THIS DOCUMENT REQUIRES APPROVAL OF HIGHLAND CITY. HIGHLAND CITY CORP. CAN NOT BE HELD LIABLE FOR MISUSE OR CHANGES REGARDING THIS DOCUMENT.

NO.	REVISION DESCRIPTION	BY	APR.	DATE

FILE: HIGHLAND STD DRAWING
DRAWN BY: JMM
DESIGN BY: CRW
CHECKED BY: TMT
LAST UPDATED: 2/9/2015

HIGHLAND CITY

HIGHLAND CITY
PUBLIC WORKS AND ENGINEERING

UTILITY LOCATIONS AT INTERSECTIONS

STD DWG # U-01

Plot Date: 2/9/2015 2:02 PM Plotted By: Chris Wilson
Date Created: 1/21/2015 \\DREMFILES\PUBLIC\PROJECTS\JUB\HIGHLAND\50-14-031 - HIGHLAND - FY 2013-2014\GENERAL\SERVICES\HIGHLAND CITY\STD DWGS\CAD\HIGHLAND STD DRAWINGS.DWG

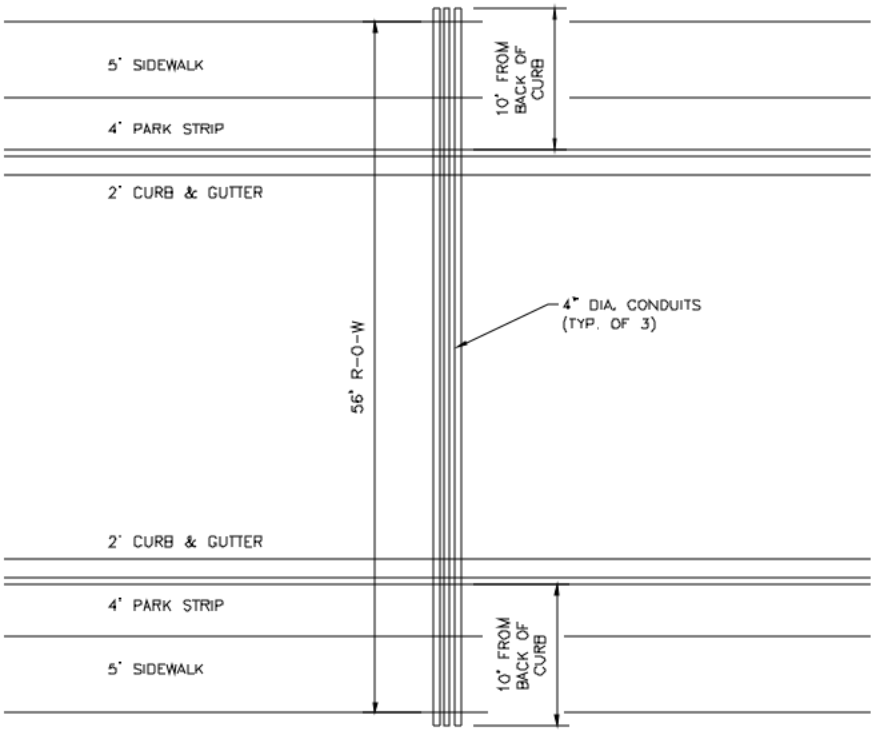

PLAN VIEW
SCALE: NTS

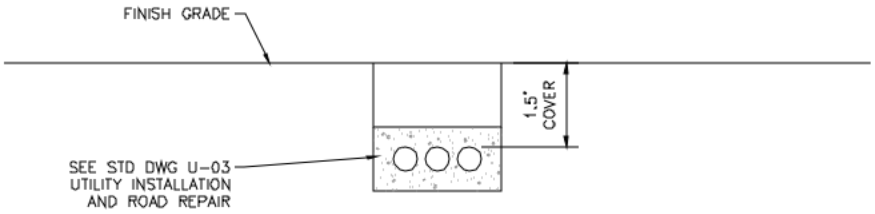

CROSS SECTION
SCALE: NTS

NOTES:

1. ALL CONDUITS SHALL BE 4" DIA. SCH. 40, GREY PVC.
2. ALL CONDUITS SHALL BE BEDDED IN SAND, WITH 1.5' OF COVER FROM FINISH GRADE.
3. THE ENDS OF EACH CONDUIT SHALL BE TAPED OR CAPPED TO PREVENT DIRT FROM ENTERING.
4. ALL CONDUITS SHALL BE SURROUNDED BY A MIN. 4" THICKNESS OF ¾" MINUS MATERIAL.
5. PULL WIRE REQUIRED.

NO.	REVISION DESCRIPTION	BY	APR.	DATE

FILE: HIGHLAND STD DRAWING
DRAWN BY: JMM
DESIGN BY: CRW
CHECKED BY: TMT
LAST UPDATED: 2/9/2015

HIGHLAND CITY

HIGHLAND CITY
PUBLIC WORKS AND ENGINEERING

CONDUIT BANK DETAIL

STD DWG #
U-02

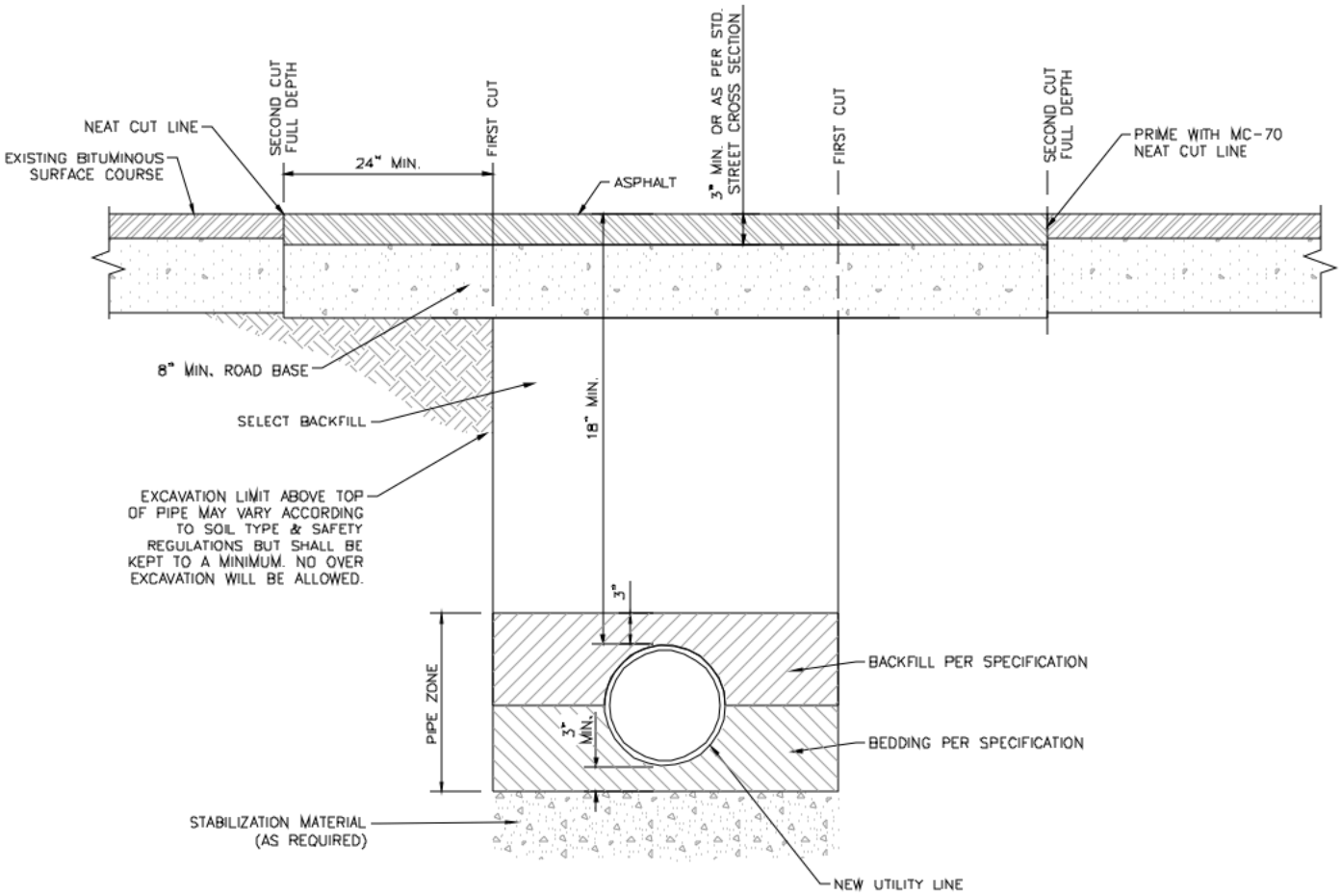

NOTE:

1. NO SAW CUT JOINT SHALL BE IN THE TIRE PATH. IF PATCH JOINT ENDS WITHIN 2' OF CURB, PATCH MUST GO TO CURB.
2. USE APWA AS GUIDE (PLAN # 255).
3. PG 58-28 PERFORMANCE GRADED ASPHALT.

STATEMENT OF USE

THIS DOCUMENT AND ANY ILLUSTRATIONS HEREON ARE PROVIDED AS STANDARD CONSTRUCTION DETAILS WITHIN HIGHLAND CITY. DEVIATION FROM THIS DOCUMENT REQUIRES APPROVAL OF HIGHLAND CITY. HIGHLAND CITY CORP. CAN NOT BE HELD LIABLE FOR MISUSE OR CHANGES REGARDING THIS DOCUMENT.

NO.	REVISION DESCRIPTION	BY	APR.	DATE

FILE: HIGHLAND STD DRAWING
DRAWN BY: JMM
DESIGN BY: CRW
CHECKED BY: TMT
LAST UPDATED: 2/9/2015

HIGHLAND CITY

HIGHLAND CITY
PUBLIC WORKS AND ENGINEERING

UTILITY TRENCH CROSS SECTION

STD DWG #
U-03

Plot Date: 2/9/2015 2:02 PM Plotted By: Chris Wilson
Date Created: 1/21/2015 \\CREMFILES\PUBLIC\PROJECTS\JUB\HIGHLAND\50-14-031 - HIGHLAND - FY 2013-2014 GENERAL SERVICES\HIGHLAND CITY\STD DWGS\CAD\HIGHLAND STD DRAWINGS.DWG

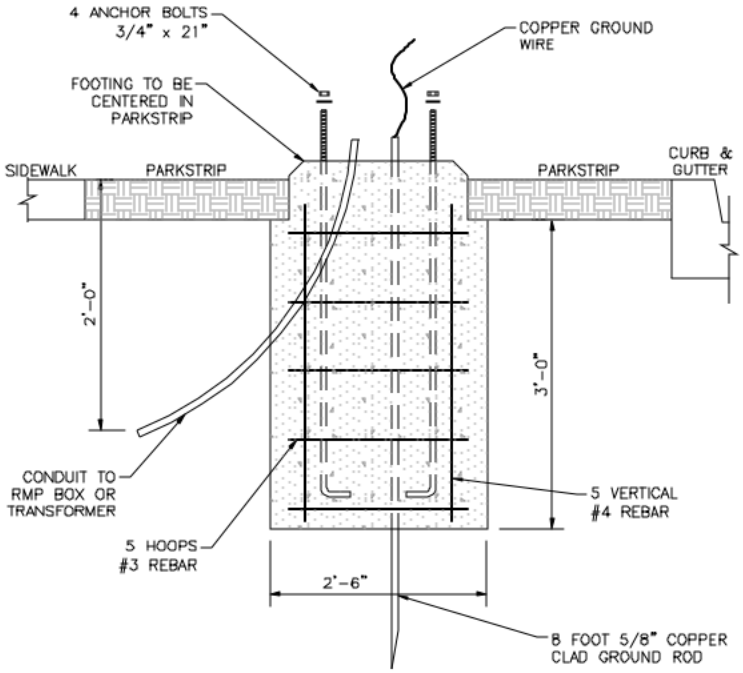

NOTE:
IN-LINE WATERTIGHT FUSE HOLDERS REQUIRED AT CONNECTION POINT IN BASE OF LIGHT LITTLEFUSE #WPB1 OR EQUAL.

LIGHT POLE DETAIL

SCALE: NTS

NOTES:

1. ALL LIGHTS SHALL BE 120V.
2. WIRE NUT, 10-12, BLUE. WET LOCATION TYPE WITH SILICONE INSIDE.
3. GROUND CONNECTOR.
4. CONDUCTOR, 8'x⅝" SOLID, CU, BARE SOFT DRAWN.
5. IN-LINE FUSE HOLDER, URD, INSULATED ENDS.
6. FUSE, 10A 600 V KTK, FNM, OR EQUIVALENT.
7. JUNCTION BOX, UNDERGROUND, STREET LIGHT, SMALL PLASTIC, FOR NO OR LOW TRAFFIC AREA, * BOX SHOULD BE PLACED AT GRADE LEVEL, AS CLOSE TO BASE AS POSSIBLE.
8. JUNCTION BOX, UNDERGROUND, POLYMER CONCRETE COVER OR CONCRETE BOX WITH STEEL COVER. TO BE USED IN HIGH TRAFFIC AREAS.
   * BOX SHOULD BE PLACED AT GRADE LEVEL, AS CLOSE TO BASE OF POLE AS POSSIBLE NOT IN SIDEWALK OR CURB.
   ** CONCRETE BOX WITH STEEL COVER TO BE USED FOR ROADWAY OR VERY HIGH TRAFFIC AREAS.
9. CLAMP, GROUND ROD, ⅝"x8' COPPER WELD/BONDED CU.
10. MOW STRIP, MADE OF CONCRETE, TUBE FORM, TYPICALLY 2"-4" WIDER THAT BASE OF POLE, FILLED WITH READY MIX CONCRETE AND LEVELED TO BASE OF POLE, 8" DEEP WITH #4 REBAR RING IN MIDDLE DEPTH.
    * MOW STRIP AROUND LIGHT POLES IS TO PROTECT AGAINST DAMAGE FROM EDGE TRIMMERS, LEVEL TO TOP BACK OF CURB.
11. HELIX FOUNDATION LIGHT POLES SHALL NOT BE PERMITED IN HIGHLAND CITY FOR THE POLES.
12. ALL CONTRACTORS INSTALLING LIGHT POLES IN HIGHLAND SHALL BE RESPONSIBLE FOR COORDINATION WITH ROCKY MOUNTAIN POWER AND HIGHLAND CITY WITH AS-BUILT PLANS SO THEY WILL BE INCORPORATED WITH BLUE STAKES FOR IDENTIFICATION. PROOF OF COMPLETION WILL BE REQUIRED BEFORE POLES ARE SIGNED OFF.
13. UNDERGROUND WIRING FOR STREET LIGHTING SHALL BE INSTALLED AS PER NEC, BURIED AT A MINIMUM DEPTH OF 18" WHEN INSTALLED WITH DIRECT BURIAL CABLE FROM POWER SOURCE, DIRECT BURY CABLE SHALL BE INSTALLED PERPENDICULAR TO CURB AND THEN RUNNING PARALLEL WITH CURB TO STREETLIGHT, WITH PLACEMENT OF WIRE A MAXIMUM DISTANCE OF 8" FROM TBC.
14. TYPE OF UNDERGROUND CABLE FOR STREET LIGHTING SHALL ALSO BE NEC APPROVED COPPER #6 OR #8 LISTED FOR DIRECT BURIAL USE.
15. THE WIRING FOR POLES SHALL BE INSTALLED WITH A BREAKAWAY FUSE AT THE BASE OF THE POLE TO PROTECT FROM POSSIBLE ELECTROCUTION IF POLE WERE TO FALL FOR ANY REASON. ON RUNS GREATER THAT 15' IN LENGTH, A JUNCTION BOX SHALL BE INSTALLED WITH A BREAKAWAY FUSE AS CLOSE AS POSSIBLE TO BASE OF POLE.
16. ALL WIRING RUNNING FROM POWER SOURCE TO LIGHT NEEDS TO BE PLACED WITHIN A RECORDED EASEMENT SO THE CITY CAN MAINTAIN THEM.

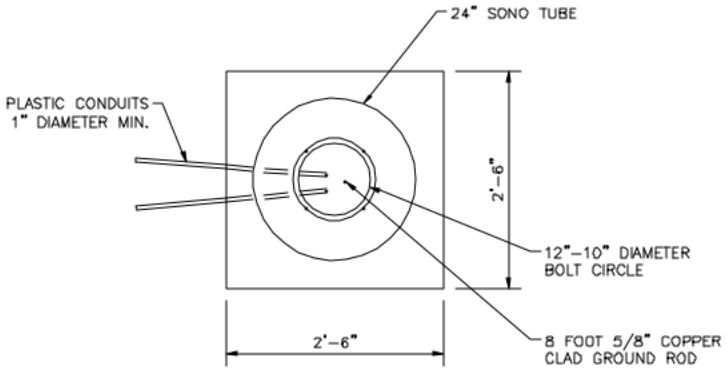

NOTE:
GROUND ROD AND PLASTIC CONDUITS MUST BE LOCATED WITHIN A 3" RADIUS FROM THE CENTER OF BOLT CIRCLE.

PLAN VIEW

SCALE: NTS

NOTES:

1. THREE WIRE COPPER CONDUCTOR (8-3/C TYPE TC 600V VNTC SUN RES DIR BUR METHOD 4 CABLE OR EQUIVALENT) SHALL BE USED ON SINGLE POLE INSTALLATIONS (1-BLACK 2-WHITE 3-GREEN)--COPPER CABLE ONLY--.
2. WIRE CONNECTORS IN HAND HOLE SHALL BE MADE BURNDY YC8L12 ELECTRICAL CONNECTORS, HSTO 4-48-5 HEAT SHRINK OR EQUIVALENT SHALL BE USED TO COMPLETE WIRE CONNECTIONS.
3. BURNDY KA25U 14-1/0 AWG AL/CU MECHANICAL LUGS OR EQUIVALENT SHALL BE USED TO CONNECT THE GROUND WIRE TO THE GROUND CLIP INSIDE THE HAND HOLE.
4. A GOULD SHAWMUT IN LINE FUSE HOLDER WITH/ BOOT #GEB-11-11-B AND AMP OTMIS GOULD FUSE OR EQUIVALENT SHALL BE INSTALLED INSIDE THE JUNCTION BOX OR TRANSFORMER CONNECTION TO THE HOT LEG OF THE POWER CABLE, SHALL BE CORRELATED BETWEEN CONTRACTORS AND ROCKY MOUNTAIN POWER.
5. STREET LIGHT POLE SHALL NOT BE INSTALLED IN A MANNER THAT WILL HINDER THE OPERATION OF FIRE HYDRANTS OR UNDERGROUND WATER SYSTEM ISOLATION VALVES.
6. INSTALLATIONS WITHIN CLOSE PROXIMITY TO TREES SHALL BE AVOIDED UNLESS APPROVED BY THE PROJECT MANAGER.
7. ALL WIRE WHICH IS INSTALLED UNDER SIDEWALK, DRIVEWAYS, OR OTHER PERMANENT STRUCTURES ARE REQUIRED TO BE PLACED IN CONDUIT.
8. POLE IS TO BE SET PLUMB. THE POLE SHALL BE INSTALLED WITHIN 1/4 DEGREE OF VERTICAL.

NO.	REVISION DESCRIPTION	BY	APR.	DATE

FILE: HIGHLAND STD DRAWING
DRAWN BY: JMM
DESIGN BY: CRW
CHECKED BY: TMT
LAST UPDATED: 2/9/2015

HIGHLAND CITY

HIGHLAND CITY
PUBLIC WORKS AND ENGINEERING

STREET LIGHT BASE DETAIL

STD DWG # U-04

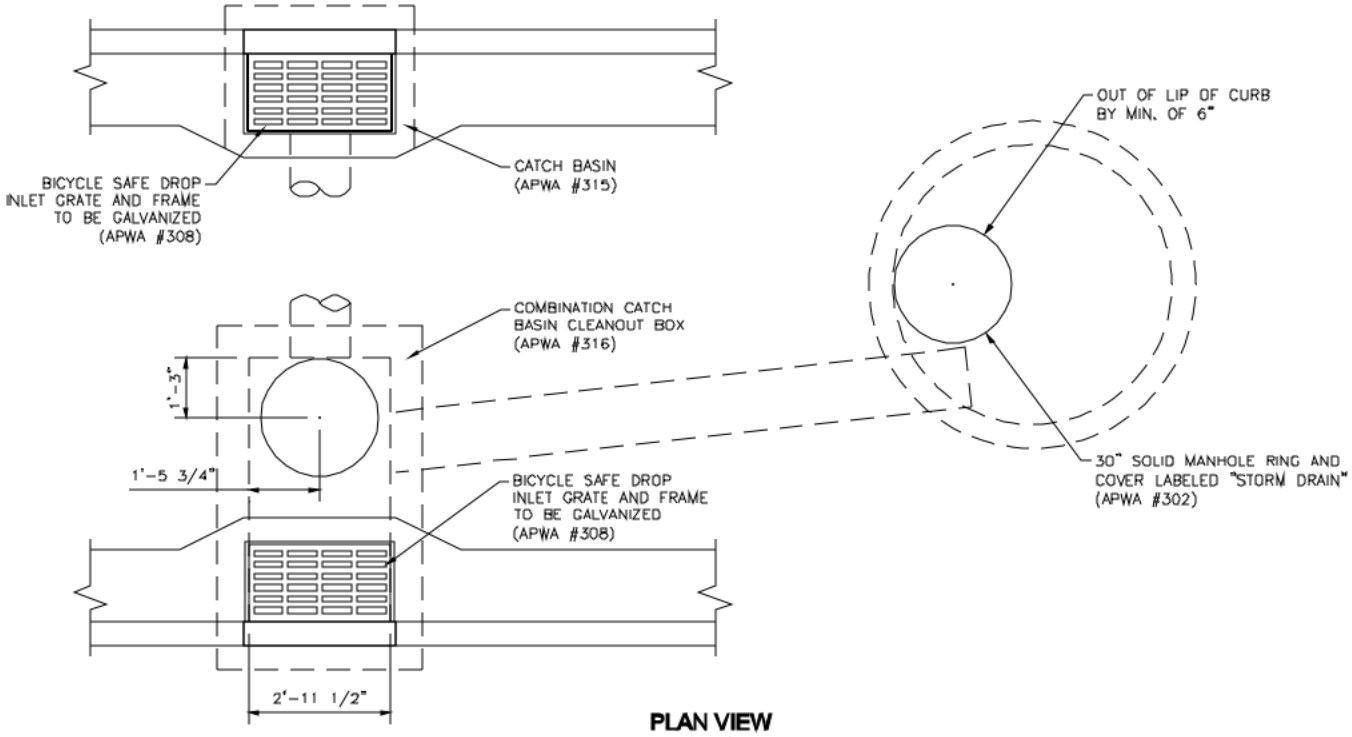

PLAN VIEW
SCALE: NTS

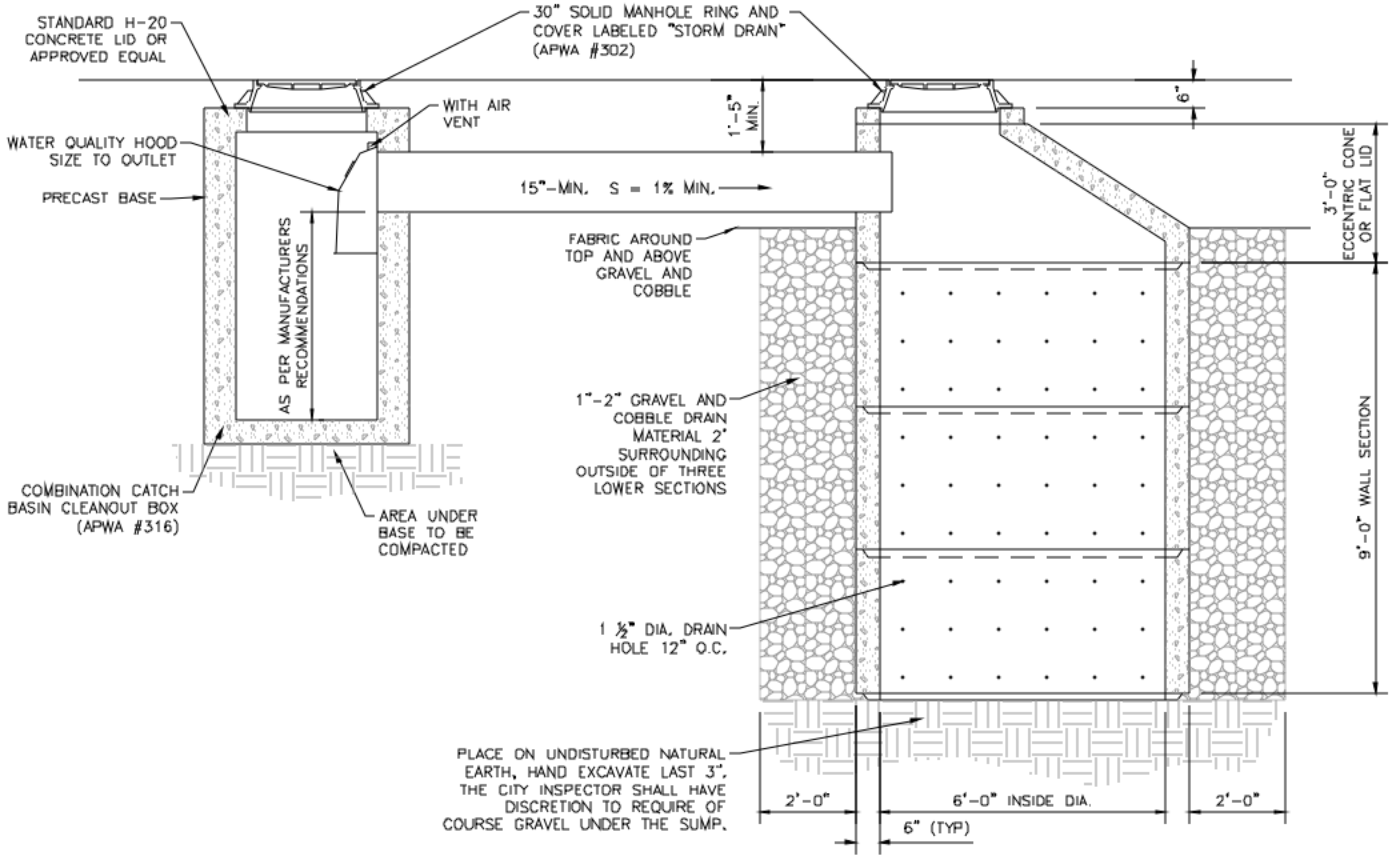

SUMP CROSS SECTION
SCALE: NTS

STATEMENT OF USE

THIS DOCUMENT AND ANY ILLUSTRATIONS HEREON ARE PROVIDED AS STANDARD CONSTRUCTION DETAILS WITHIN HIGHLAND CITY. DEVIATION FROM THIS DOCUMENT REQUIRES APPROVAL OF HIGHLAND CITY. HIGHLAND CITY CORP. CAN NOT BE HELD LIABLE FOR MISUSE OR CHANGES REGARDING THIS DOCUMENT.

NO.	REVISION DESCRIPTION	BY	APR.	DATE

FILE: HIGHLAND STD DRAWING
DRAWN BY: JMM
DESIGN BY: CRW
CHECKED BY: TMT
LAST UPDATED: 2/9/2015

HIGHLAND CITY
PUBLIC WORKS AND ENGINEERING

STORM DRAIN AND SUMP DETAIL

STD DWG # SD-01

Plot Date: 2/9/2015 2:02 PM Plotted By: Chris Wilson
Date Created: 1/21/2015 \\DREMFILES\PUBLIC\PROJECTS\JUB\HIGHLAND\50-14-031 - HIGHLAND - FY 2013-2014 GENERAL SERVICES\HIGHLAND CITY\STD DWGS\CAD\HIGHLAND STD DRAWINGS.DWG

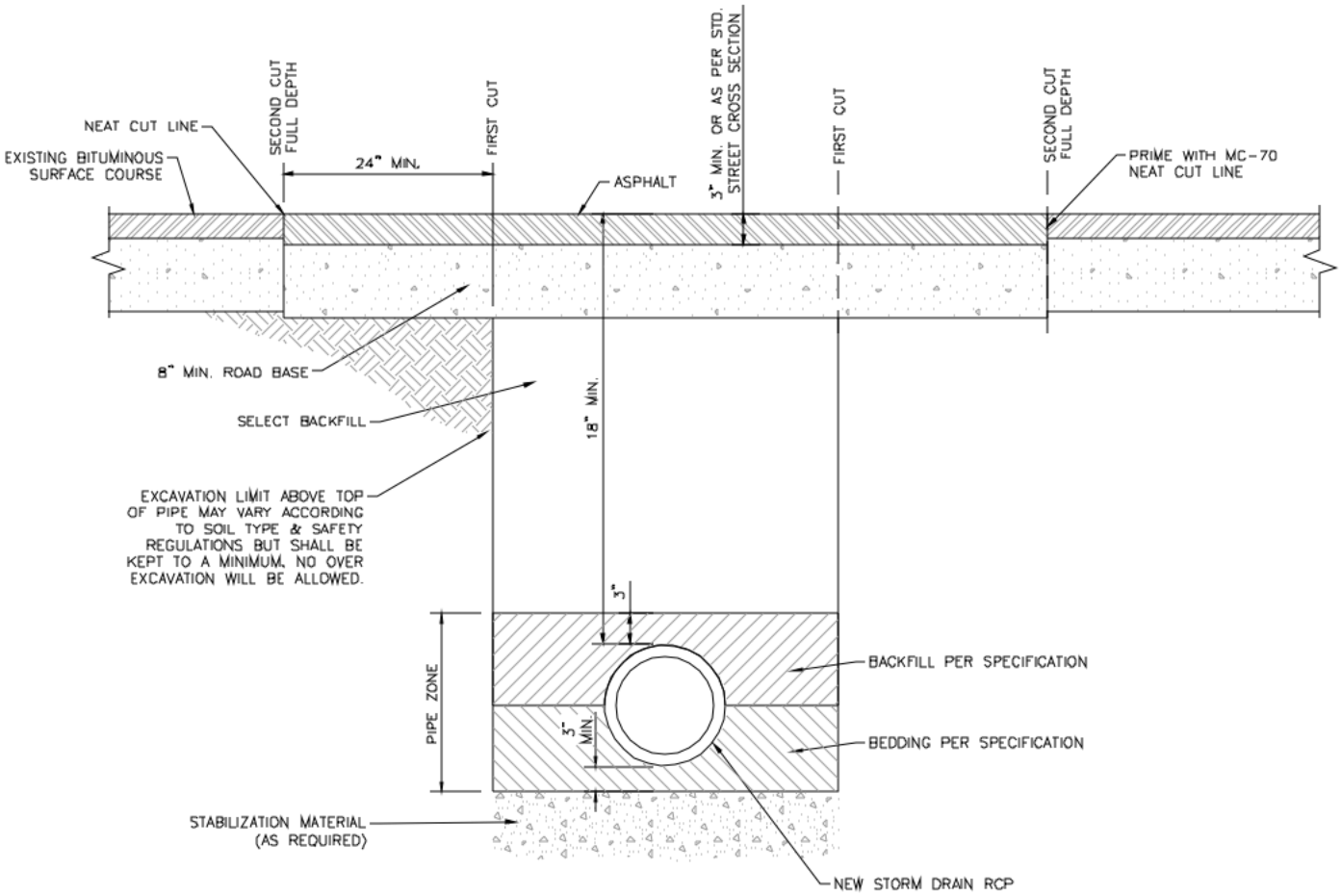

NOTE:

1. NO SAW CUT JOINT SHALL BE IN THE TIRE PATH. IF PATCH JOINT ENDS WITHIN 2' OF CURB, PATCH MUST GO TO CURB.
2. USE APWA AS GUIDE (PLAN # 255).
3. PG 58-28 PERFORMANCE GRADED ASPHALT.

NO.	REVISION DESCRIPTION	BY	APR.	DATE

FILE: HIGHLAND STD DRAWING
DRAWN BY: JMM
DESIGN BY: CRW
CHECKED BY: TMT
LAST UPDATED: 2/9/2015

HIGHLAND CITY

HIGHLAND CITY
PUBLIC WORKS AND ENGINEERING

STORM DRAIN TRENCH CROSS SECTION

STD DWG # SD-02

Plot Date: 2/9/2015 2:02 PM Plotted By: Chris Wilson
Date Created: 1/21/2015 \\CREMFILES\PUBLIC\PROJECTS\JUB\HIGHLAND\50-14-031 - HIGHLAND - FY 2013-2014 GENERAL SERVICES\HIGHLAND CITY STD DWGS\CAD\HIGHLAND STD DRAWINGS.DWG

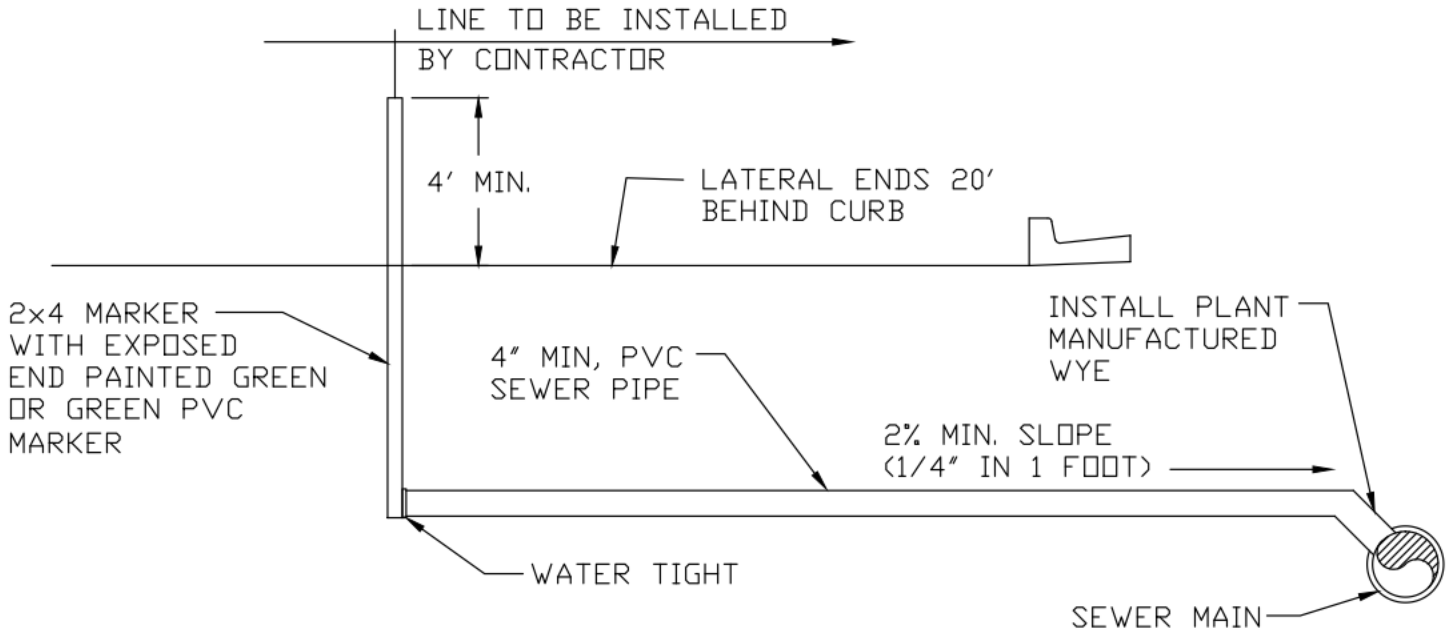

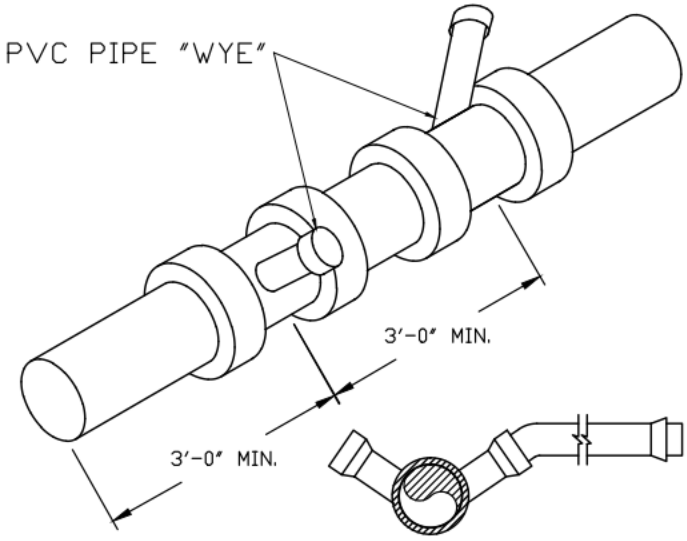

NOTES:

1. SANITARY SEWER SERVICE TAPS SHALL BE LOCATED ON THE MAIN AT THE 2 O'CLOCK OR 10 O'CLOCK POSITION.
2. THE MINIMUM DISTANCE BETWEEN ANY TWO CONSECUTIVE FITTINGS SHALL BE 3 FEET, MEASURED BETWEEN FITTING CENTERLINES.
3. SANITARY SEWER SERVICE TAPS SHALL NOT BE MADE WITHIN 3 FEET OF A PIPE JOINT, OR 5 FEET FROM EDGE OF MANHOLE BASE.
4. A MAXIMUM OF FOUR SERVICE TAPS ARE ALLOWED PER 20 FOOT LENGTH OF PIPE.
5. ALL SANITARY SEWER TAPS SHALL USE "WYE" STYLE FITTINGS. TEES ARE NOT ALLOWED.
6. LATERAL SHALL NOT ENTER MANHOLES, UNLESS APPROVED BY CITY ENGINEER AND CITY PUBLIC WORKS DEP.
7. AN APPROVED PVC "WYE" SHALL BE USED ON NEW MAIN LINE INSTALLATIONS 18" OR SMALLER.
8. TAPS INSTALLED IN STAGGERED CONFIGURATION AT 10 O'CLOCK OR 2 O'CLOCK POSITION.

NO.	REVISION DESCRIPTION	BY	APR.	DATE

FILE: HIGHLAND CITY SS-01 SEWER LATERAL DETAIL
DRAWN BY: ####
DESIGN BY: ####
CHECKED BY: ####
LAST UPDATED: 1/29/2015

HIGHLAND CITY
PUBLIC WORKS AND ENGINEERING

SEWER LATERAL DETAIL

STD DWG #
SS-01

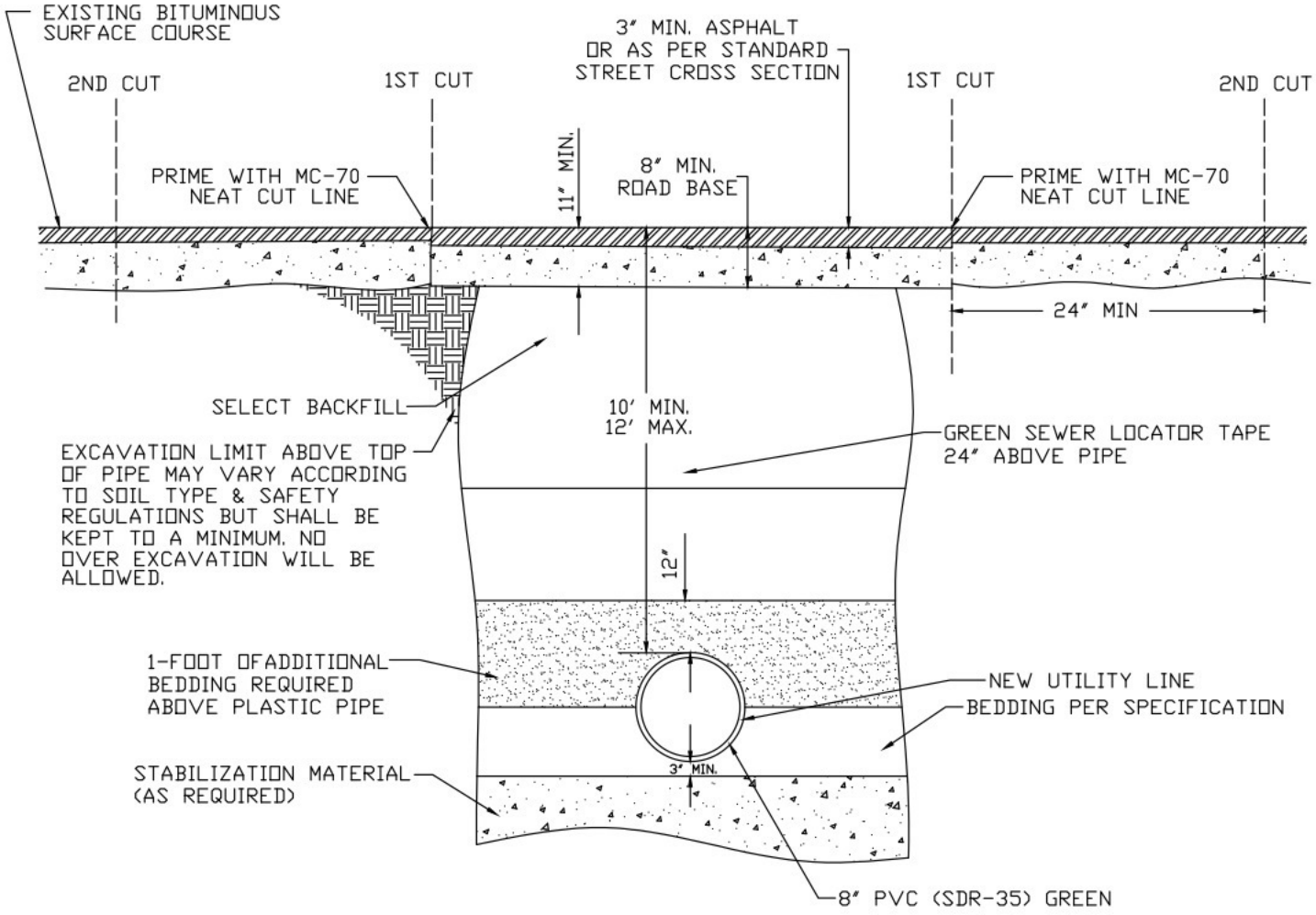

NOTE: USE APWA AS GUIDE
PG 58-28 PERFORMANCE GRADE ASPHALT

Plot Date: 1/29/2015 3:37 PM Plotted By: Jason Bradford
Date Created: 7/28/2014 H:/PROJECTS/314 - HIGHLAND CITY/05.100 - MISC CONSULTING/STANDARD DETAILS/HIGHLAND CITY SS-02 SEWER INSTALLATION AND ROAD REPAIR DETAIL.DWG

STATEMENT OF USE
THIS DOCUMENT AND ANY ILLUSTRATIONS HEREON ARE PROVIDED AS STANDARD CONSTRUCTION DETAILS WITHIN HIGHLAND CITY. DEVIATION FROM THIS DOCUMENT REQUIRES APPROVAL OF HIGHLAND CITY. HIGHLAND CITY CORP. CAN NOT BE HELD LIABLE FOR MISUSE OR CHANGES REGARDING THIS DOCUMENT.

NO.	REVISION DESCRIPTION	BY	APR.	DATE

FILE: HIGHLAND CITY SS-02 SEWER INSTALLATION AND ROAD REPAIR DETAIL
DRAWN BY: ####
DESIGN BY: ####
CHECKED BY: ####
LAST UPDATED: 1/29/2015

HIGHLAND CITY
PUBLIC WORKS AND ENGINEERING

SEWER INSTALLATION AND ROAD REPAIR

STD DWG #
SS-02

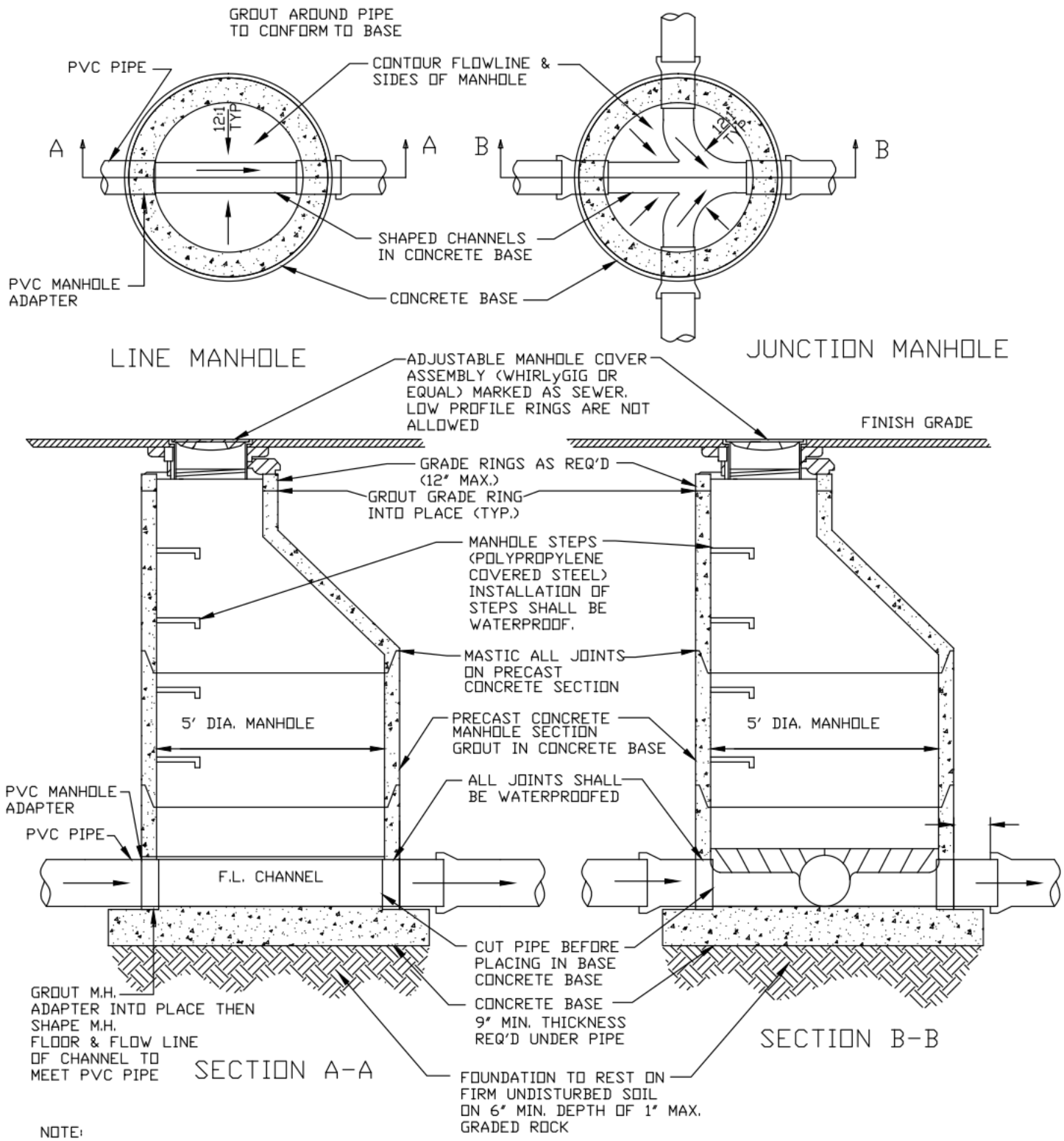

NOTE:
RUBBER BOOT JOINTS WITH
STAINLESS STEEL CONNECTION
BANDS REQUIRED

STATEMENT OF USE

THIS DOCUMENT AND ANY ILLUSTRATIONS HEREON ARE PROVIDED AS STANDARD CONSTRUCTION DETAILS WITHIN HIGHLAND CITY. DEVIATION FROM THIS DOCUMENT REQUIRES APPROVAL OF HIGHLAND CITY. HIGHLAND CITY CORP. CAN NOT BE HELD LIABLE FOR MISUSE OR CHANGES REGARDING THIS DOCUMENT.

NO.	REVISION DESCRIPTION	BY	APR.	DATE

FILE: HIGHLAND CITY SS-03 SEWER MANHOLE DETAIL
DRAWN BY: ####
DESIGN BY: ####
CHECKED BY: ####
LAST UPDATED: 1/29/2015

HIGHLAND CITY
PUBLIC WORKS AND ENGINEERING

SEWER MANHOLE

STD DWG #
SS-03

Plot Date: 1/29/2015 3:39 PM Plotted By: Jason Bradford
Date Created: 7/25/2014 H:\PROJECTS\314 - HIGHLAND CITY\05.100 - MISC CONSULTING\STANDARD DETAILS\HIGHLAND CITY SS-03 SEWER MANHOLE DETAIL.DWG

GENERAL NOTES:

USE OF DROP MANHOLES ONLY AS APPROVED BY HIGHLAND CITY ENGINEER AND CITY PUBLIC WORKS DIRECTOR. DROP MANHOLES MAY BE REQUIRED FOR SEWERS ENTERING 24" OR MORE ABOVE THE INVERT OF THE MANHOLE.

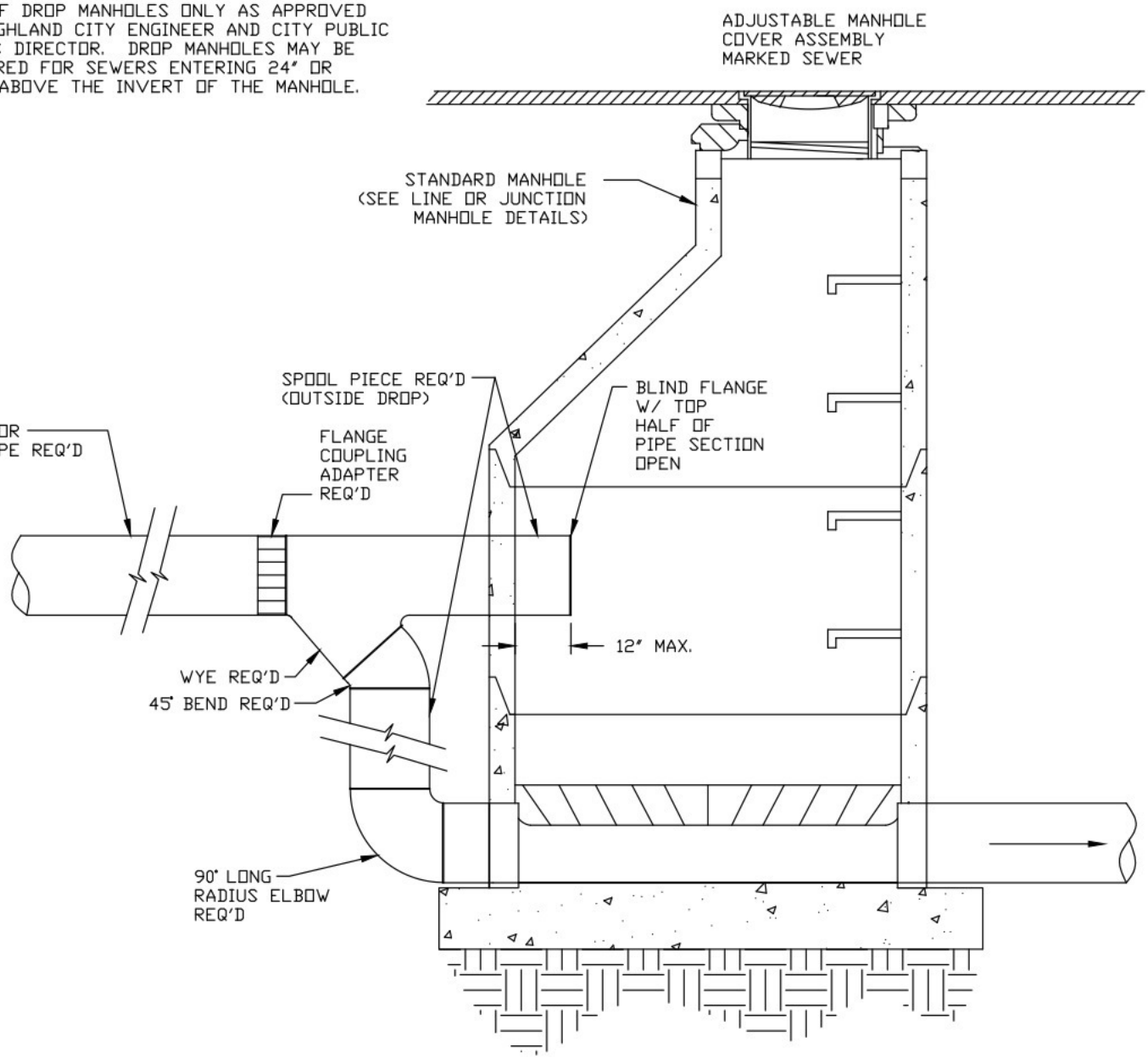

STATEMENT OF USE

THIS DOCUMENT AND ANY ILLUSTRATIONS HEREON ARE PROVIDED AS STANDARD CONSTRUCTION DETAILS WITHIN HIGHLAND CITY. DEVIATION FROM THIS DOCUMENT REQUIRES APPROVAL OF HIGHLAND CITY. HIGHLAND CITY CORP. CAN NOT BE HELD LIABLE FOR MISUSE OR CHANGES REGARDING THIS DOCUMENT.

NO.	REVISION DESCRIPTION	BY	APR.	DATE

FILE: HIGHLAND CITY SS-04 DROP MANHOLE DETAIL

DRAWN BY: ####

DESIGN BY: ####

CHECKED BY: ####

LAST UPDATED: 1/29/2015

HIGHLAND CITY

HIGHLAND CITY
PUBLIC WORKS AND ENGINEERING

SEWER DROP MANHOLE DETAIL

STD DWG #

SS-04

Plot Date: 1/29/2015 3:40 PM Plotted By: Jason Bradford
Date Created: 7/25/2014 H:/PROJECTS/314 - HIGHLAND CITY/05.100 - MISC CONSULTING\STANDARD DETAILS\HIGHLAND CITY SS-04 DROP MANHOLE DETAIL.DWG

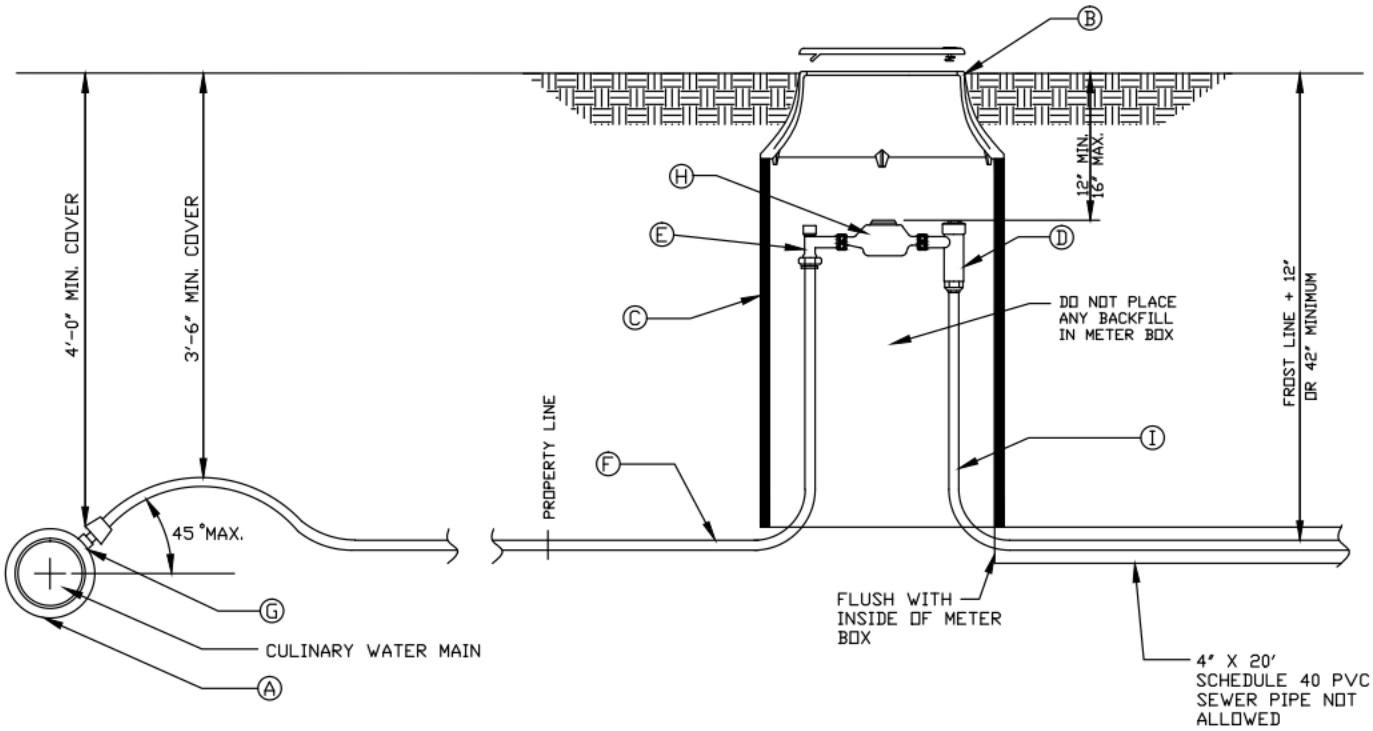

LEGEND

No.	*	ITEM	NOTE
A		MUELLER OR ROMAC WITH IP TAP	STAINLESS STEEL BAND WITH TEFLON COATING
B		RING AND COVER	CAST IRON COVER (grass) WITH KNOCKOUT DUCTILE COVER (driveway) WITH RADIO READ HOLE
C		METER BOX (18" DIAMETER) (36" DEEP)	METER BARRELS A.D.S. WHITE IN COLOR
D	*	RESIDENTIAL DUAL CHECK	INSTALLED BY WATER DEPT. AT METER SET
E		3/4" PACK JOINT (PJ) ANGLE METER VALVE	FORD 300 BALL ANGLE METER VALVE
F		COPPER PIPE 3/4"	TYPE K (SOFT) 3/4" (UPGRADE TO 1" IF OVER 50')
G		CORPORATION STOP PACK JOINT X IRON PIPE SIZE	MUELLER 300 BALL TYPE CORPORATION STOP OR FORD FB1100
H	*	WATER METER	INSTALLED BY WATER DEPT. AT METER SET
I		COPPER OR POLY PIPE	CTS (COPPER TUBE SIZE) OR IPS (IRON PIPE SIZE)

* FURNISHED BY UTILITY AGENCY

NOTE:
COMMERCIAL WATER SERVICES REQUIRE
21" METER BOX AND LID, AND 1" COPPER
AND FITTINGS.

NO.	REVISION DESCRIPTION	BY	APR	DATE

FILE: HIGHLAND CITY DW-01 WATER METER DETAIL
DRAWN BY: ####
DESIGN BY: ####
CHECKED BY: ####
LAST UPDATED: 1/29/2015

HIGHLAND CITY
PUBLIC WORKS AND ENGINEERING

WATER METER DETAIL

STD DWG #
DW-01

1.5"-2" METER SETTER

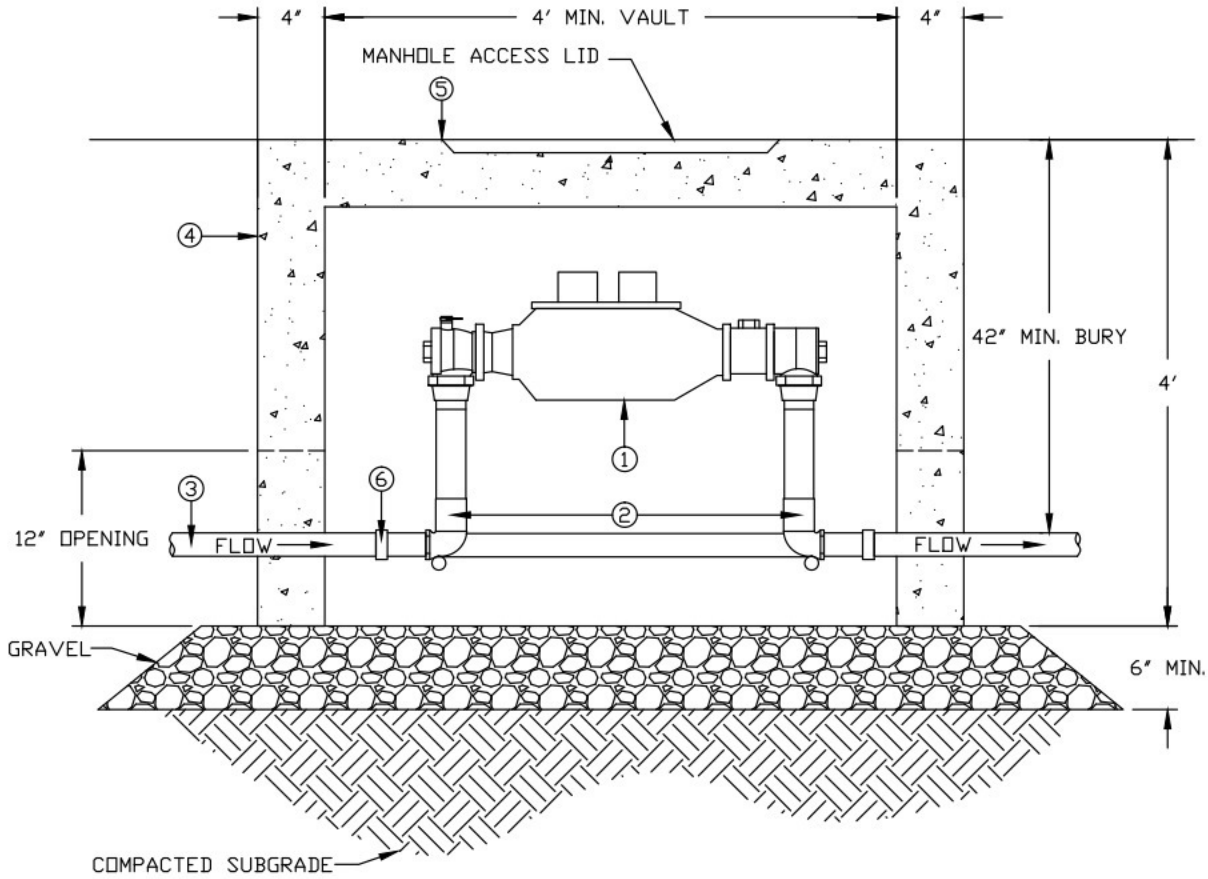

#	PART	MANUFACTURER MODEL/ CAT. NO.
1.	1.5"-2" COMPOUND METER	FURNISHED BY HIGHLAND CITY
2.	1.5"-2" METER SETTER	FORD VBH 47-18 OR VBH 46-18 WITH PADLOCK RING 18" RISE MUELLER H-1422-2
3.	1.5"-2" TYPE "K" SOFT COPPER ROLLED TUBING OR BLUE POLY (CTS)-NSF APPROVED	
4.	4'x4' PRECAST CONCRETE METER VAULT	(OR APPROVED EQUIVALENT)
5.	MAN HOLE LID	
6.	1.5"-2" COMPRESSION	
7.	SERVICE SADDLE- DOUBLE STAINLESS STEEL STRAPS NYLON-COATED ROMAC TYPE 202-N	

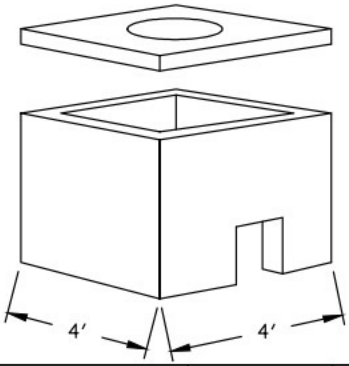

STATEMENT OF USE

THIS DOCUMENT AND ANY ILLUSTRATIONS HEREON ARE PROVIDED AS STANDARD CONSTRUCTION DETAILS WITHIN HIGHLAND CITY. DEVIATION FROM THIS DOCUMENT REQUIRES APPROVAL OF HIGHLAND CITY. HIGHLAND CITY CORP. CAN NOT BE HELD LIABLE FOR MISUSE OR CHANGES REGARDING THIS DOCUMENT.

NO.	REVISION DESCRIPTION	BY	APR.	DATE

FILE: HIGHLAND CITY DW-02
DRAWN BY: ####
DESIGN BY: ####
CHECKED BY: ####
LAST UPDATED: 1/29/2015

COMMERCIAL METER VAULT DETAIL

HIGHLAND CITY
PUBLIC WORKS AND ENGINEERING

COMMERCIAL WATER METER VAULT

STD DWG #
DW-02

Plot Date: 1/29/2015 2:24 PM Plotted By: Jason Bradford
Date Created: 7/25/2014 H:/PROJECTS/314 - HIGHLAND CITY/05.100 - MISC CONSULTING\STANDARD DETAILS\HIGHLAND CITY DW-02 COMMERCIAL METER VAULT DETAIL.DWG

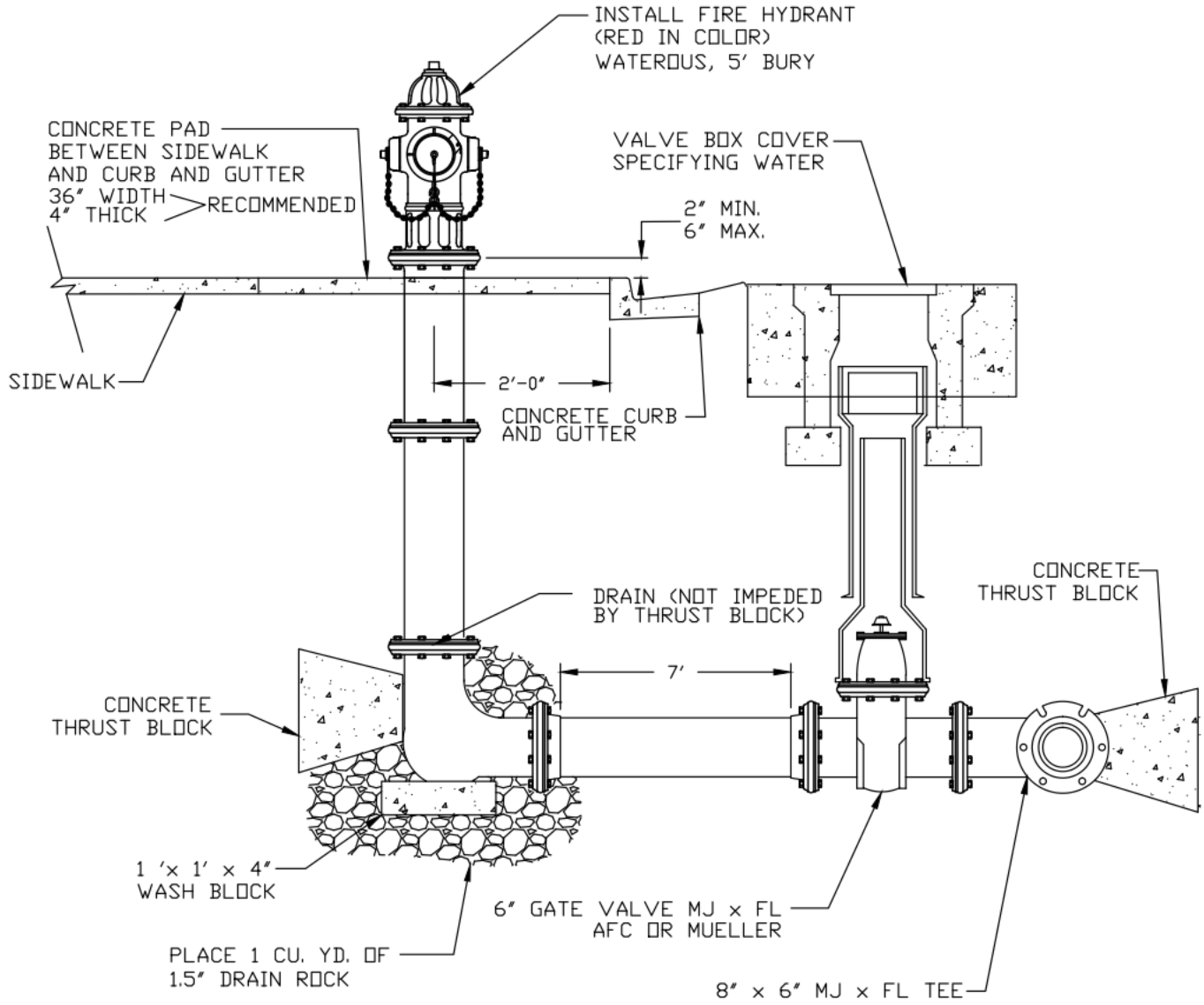

NOTE:
ENCASE WITH POLYWRAP
FM GREASE ON ALL NUTS AND BOLTS

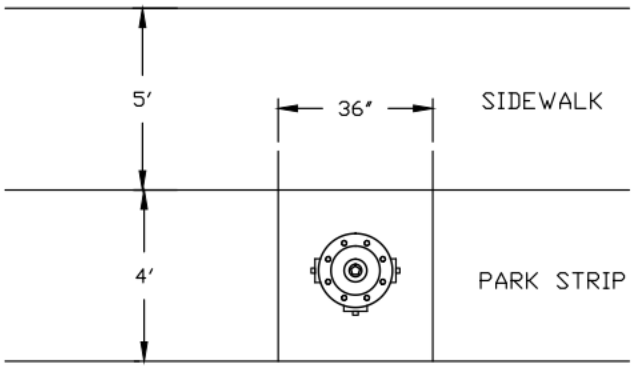

CURB AND GUTTER

WATER

STATEMENT OF USE
THIS DOCUMENT AND ANY ILLUSTRATIONS HEREON ARE PROVIDED AS STANDARD CONSTRUCTION DETAILS WITHIN HIGHLAND CITY. DEVIATION FROM THIS DOCUMENT REQUIRES APPROVAL OF HIGHLAND CITY. HIGHLAND CITY CORP. CAN NOT BE HELD LIABLE FOR MISUSE OR CHANGES REGARDING THIS DOCUMENT.

NO.	REVISION DESCRIPTION	BY	APR	DATE

FILE: HIGHLAND CITY DW-03 FIRE HYDRANT DETAIL
DRAWN BY: ####
DESIGN BY: ####
CHECKED BY: ####
LAST UPDATED: 1/29/2015

HIGHLAND CITY
PUBLIC WORKS AND ENGINEERING

FIRE HYDRANT DETAIL

STD DWG #
DW-03

Plot Date: 1/29/2015 2:27 PM Plotted By: Jason Bradford
Date Created: 7/25/2014 H:\PROJECTS\314 - HIGHLAND CITY\05.100 - MISC CONSULTING\STANDARD DETAILS\HIGHLAND CITY DW-03 FIRE HYDRANT DETAIL.DWG

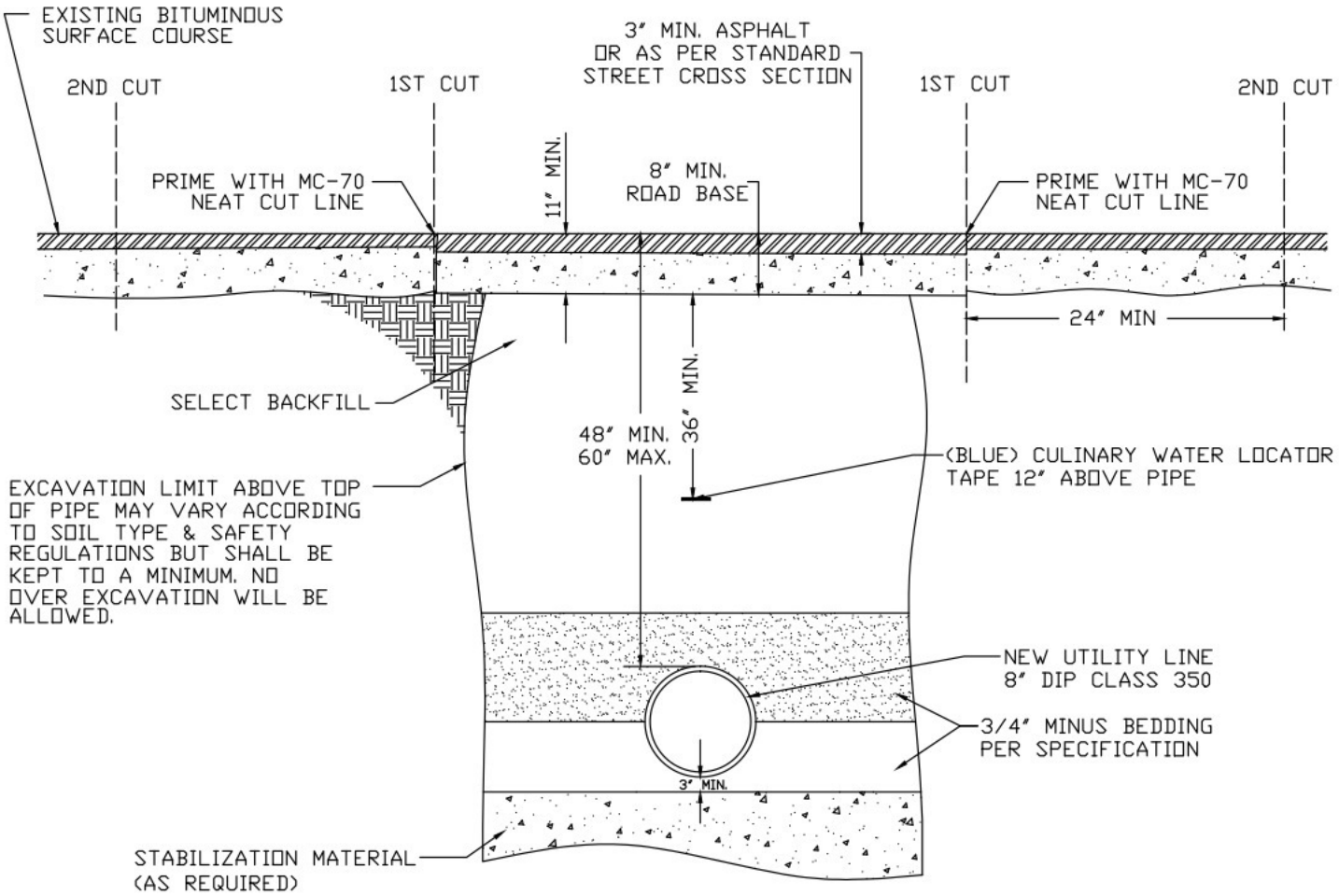

NOTES: USE APWA AS GUIDE
POLYWRAP (AWWA) C 105
FM GREASE ON BOLTS
PG 58-28 PERFORMANCE GRADE ASPHALT

Plot Date: 1/29/2015 2:33 PM Plotted By: Jason Bradford
Date Created: 7/25/2014 H:/PROJECTS/314 - HIGHLAND CITY/05.100 - MISC CONSULTING\STANDARD DETAILS\HIGHLAND CITY DW-04 WATER TRENCH.DWG

STATEMENT OF USE
THIS DOCUMENT AND ANY ILLUSTRATIONS HEREON ARE PROVIDED AS STANDARD CONSTRUCTION DETAILS WITHIN HIGHLAND CITY. DEVIATION FROM THIS DOCUMENT REQUIRES APPROVAL OF HIGHLAND CITY. HIGHLAND CITY CORP. CAN NOT BE HELD LIABLE FOR MISUSE OR CHANGES REGARDING THIS DOCUMENT.

NO.	REVISION DESCRIPTION	BY	APR.	DATE

FILE: HIGHLAND CITY DW-04 WATER TRENCH
DRAWN BY: ####
DESIGN BY: ####
CHECKED BY: ####
LAST UPDATED: 1/29/2015

HIGHLAND CITY
PUBLIC WORKS AND ENGINEERING

WATER TRENCH DETAIL

STD DWG #
DW-04

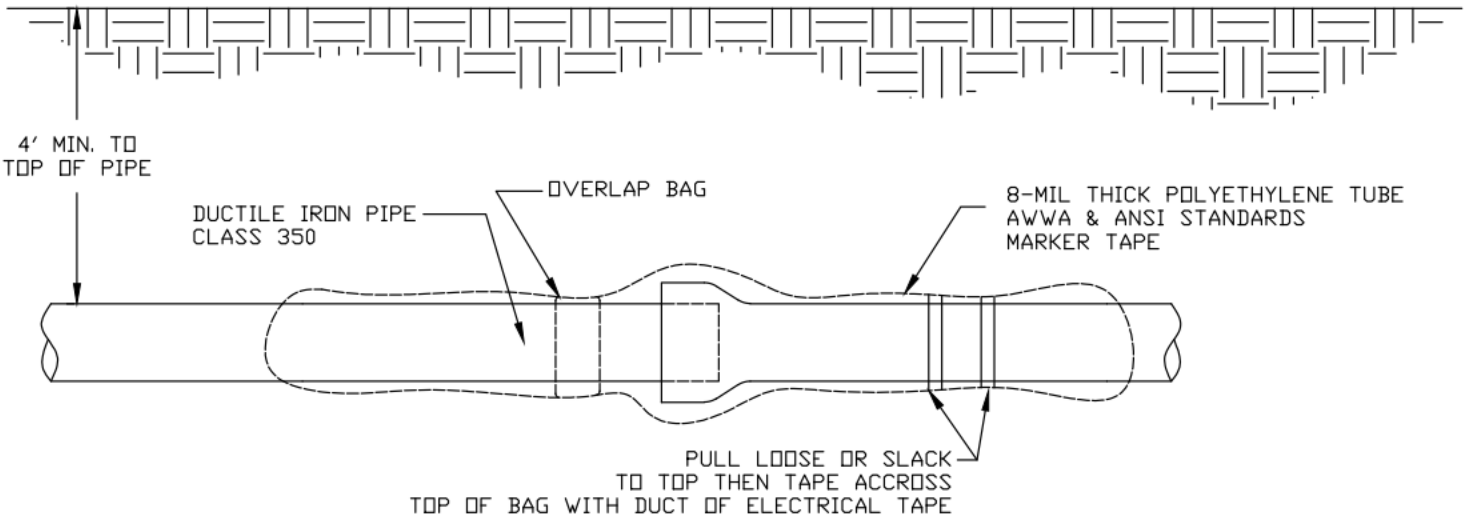

STATEMENT OF USE

THIS DOCUMENT AND ANY ILLUSTRATIONS HEREON ARE PROVIDED AS STANDARD CONSTRUCTION DETAILS WITHIN HIGHLAND CITY. DEVIATION FROM THIS DOCUMENT REQUIRES APPROVAL OF HIGHLAND CITY. HIGHLAND CITY CORP. CAN NOT BE HELD LIABLE FOR MISUSE OR CHANGES REGARDING THIS DOCUMENT.

NO.	REVISION DESCRIPTION	BY	APR.	DATE

FILE: HIGHLAND CITY DW-05 POLYETHYLENE WRAP DETAIL

DRAWN BY: ####

DESIGN BY: ####

CHECKED BY: ####

LAST UPDATED: 1/29/2015

HIGHLAND CITY

HIGHLAND CITY
PUBLIC WORKS AND ENGINEERING

POLYETHYLENE WRAP DETAIL

STD DWG #

DW-05

Plot Date: 1/29/2015 2:35 PM Plotted By: Jason Bradford
Date Created: 7/25/2014 H:/PROJECTS/314 - HIGHLAND CITY/05.100 - MISC CONSULTING\STANDARD DETAILS\HIGHLAND CITY DW-05 POLYETHYLENE WRAP DETAIL.DWG

NOTE:
DUAL SERVICE LOCATED
ON PROPERTY LINE

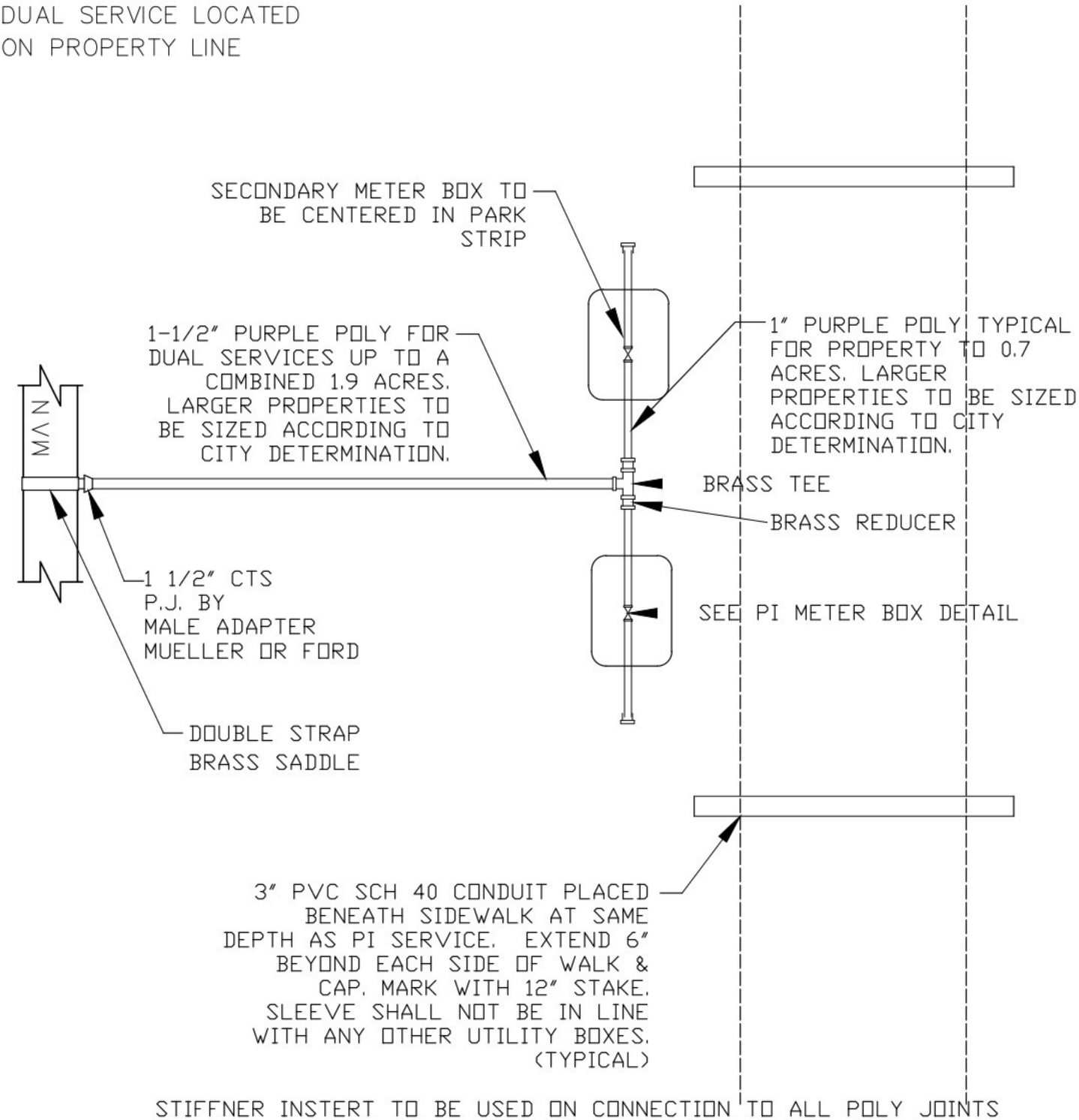

STIFFNER INSTERT TO BE USED ON CONNECTION TO ALL POLY JOINTS
TRACER WIRE TO EXTEND TO BOX FROM MAIN

NO.	REVISION DESCRIPTION	BY	APR.	DATE

FILE: HIGHLAND CITY PI-01 SERVICE DETAIL
DRAWN BY: ####
DESIGN BY: ####
CHECKED BY: ####
LAST UPDATED: 1/29/2015

HIGHLAND CITY
PUBLIC WORKS AND ENGINEERING

P.I. SERVICES DETAIL

STD DWG #
PI-01

Plot Date: 1/29/2015 2:56 PM Plotted By: Jason Bradford
Date Created: 7/28/2014 H:\PROJECTS\314 - HIGHLAND CITY\05.100 - MISC CONSULTING\STANDARD DETAILS\HIGHLAND CITY PI-01 SERVICE DETAIL.DWG

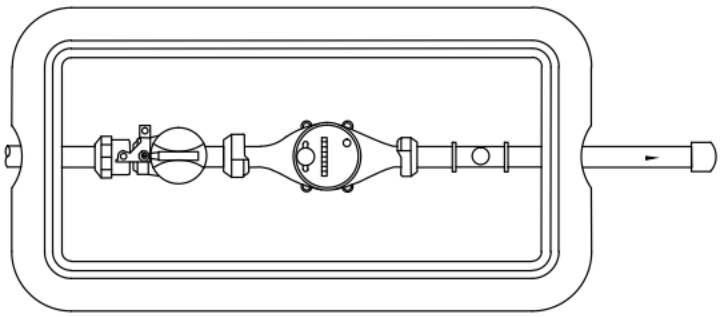

PLAN

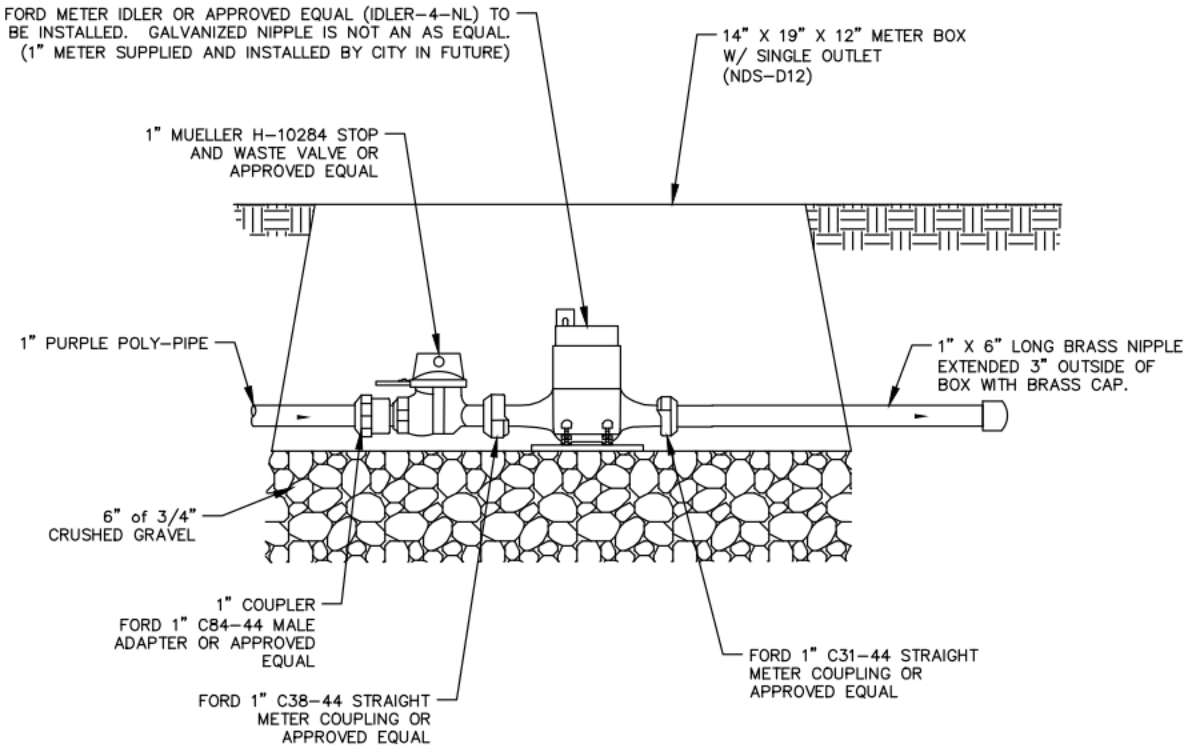

SECTION

NOTES:

1. 1" METER PROVIDED BY CITY IN FUTURE
2. ALL PIPES SHALL BE BURIED WITH 14 GAUGE STRANDED THHN TRACE WIRE
3. PROPERTY OWNERS SHALL NOT REMOVE/MODIFY ANY PORTION OF THE METER BOX.

NO.	REVISION DESCRIPTION	BY	APR.	DATE

FILE: HIGHLAND CITY PI-02 -INCH METER BOX
DRAWN BY: ####
DESIGN BY: ####
CHECKED BY: ####
LAST UPDATED: 1/29/2015

HIGHLAND CITY
PUBLIC WORKS AND ENGINEERING

P.I. 1-INCH METER BOX DETAIL

STD DWG #
PI-02

Plot Date: 1/29/2015 2:57 PM Plotted By: Jason Bradford
Date Created: 7/10/2014 H:\PROJECTS\314 - HIGHLAND CITY\05.100 - MISC CONSULTING\STANDARD DETAILS\HIGHLAND CITY PI-02 1-INCH METER BOX.DWG

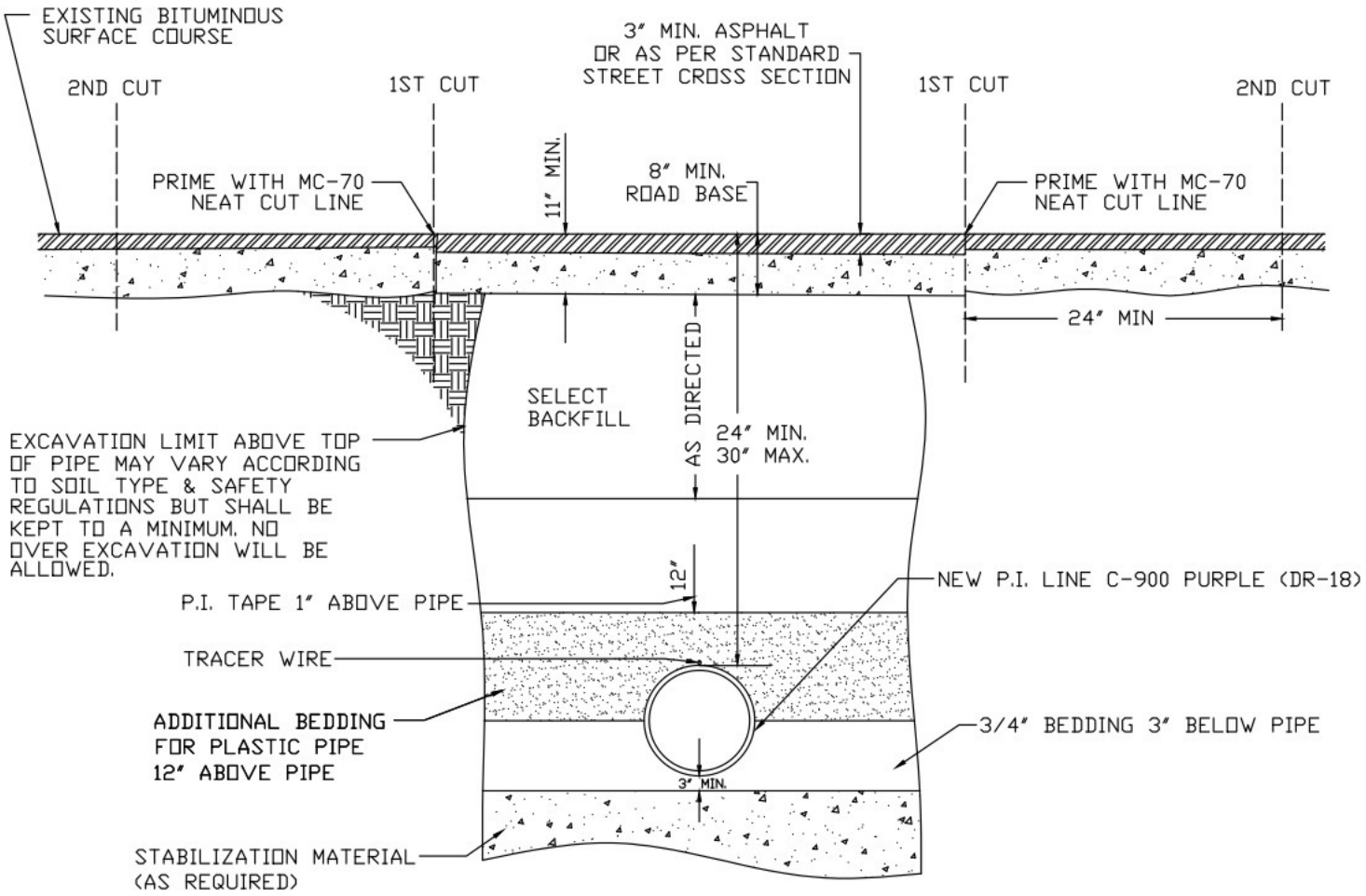

NOTES: USE APWA AS GUIDE
POLYWRAP (AWWA) C 105
FM GREASE ON BOLTS
PG 58-28 PERFORMANCE GRADE ASPHALT

STATEMENT OF USE
THIS DOCUMENT AND ANY ILLUSTRATIONS HEREON ARE PROVIDED AS STANDARD CONSTRUCTION DETAILS WITHIN HIGHLAND CITY. DEVIATION FROM THIS DOCUMENT REQUIRES APPROVAL OF HIGHLAND CITY. HIGHLAND CITY CORP. CAN NOT BE HELD LIABLE FOR MISUSE OR CHANGES REGARDING THIS DOCUMENT.

NO.	REVISION DESCRIPTION	BY	APR.	DATE

FILE: HIGHLAND CITY PI-03 WATER LINE TRENCH
DRAWN BY: ####
DESIGN BY: ####
CHECKED BY: ####
LAST UPDATED: 1/29/2015

HIGHLAND CITY
PUBLIC WORKS AND ENGINEERING

P.I. WATER LINE TRENCH DETAIL

STD DWG #
PI-03

Plot Date: 1/29/2015 3:21 PM Plotted By: Jason Bradford
Date Created: 7/23/2014 H:\PROJECTS\314 - HIGHLAND CITY\05.100 - MISC CONSULTING\STANDARD DETAILS\HIGHLAND CITY PI-03 WATER LINE TRENCH.DWG

END OF LINE 4" DRAIN

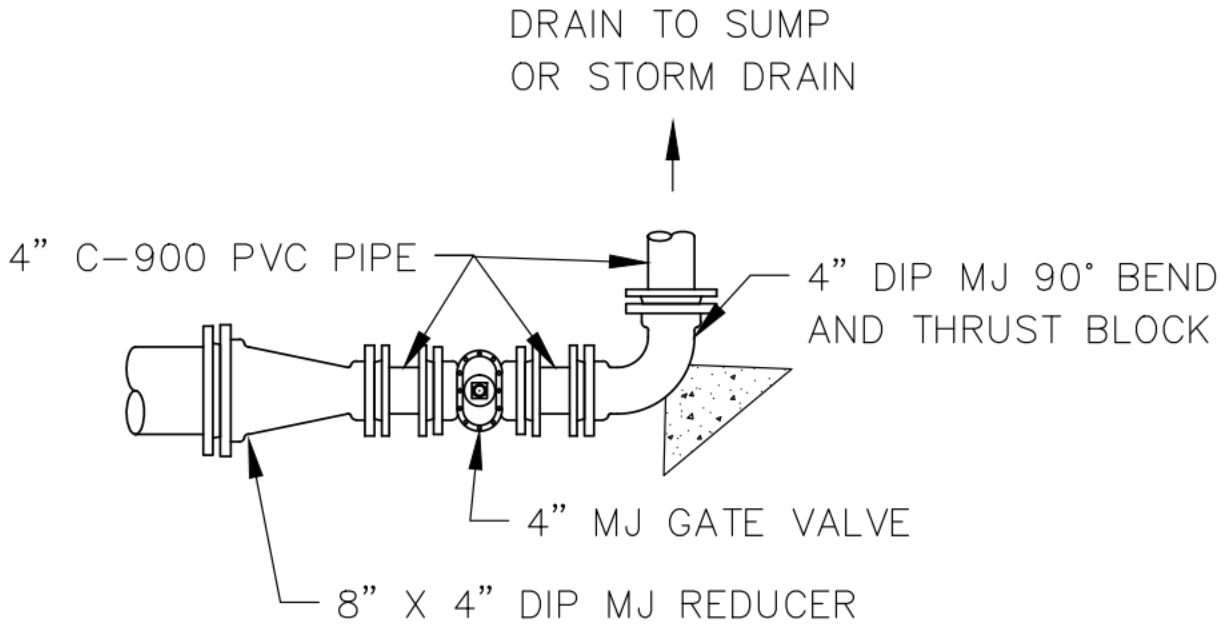

LOW SPOT IN LINE

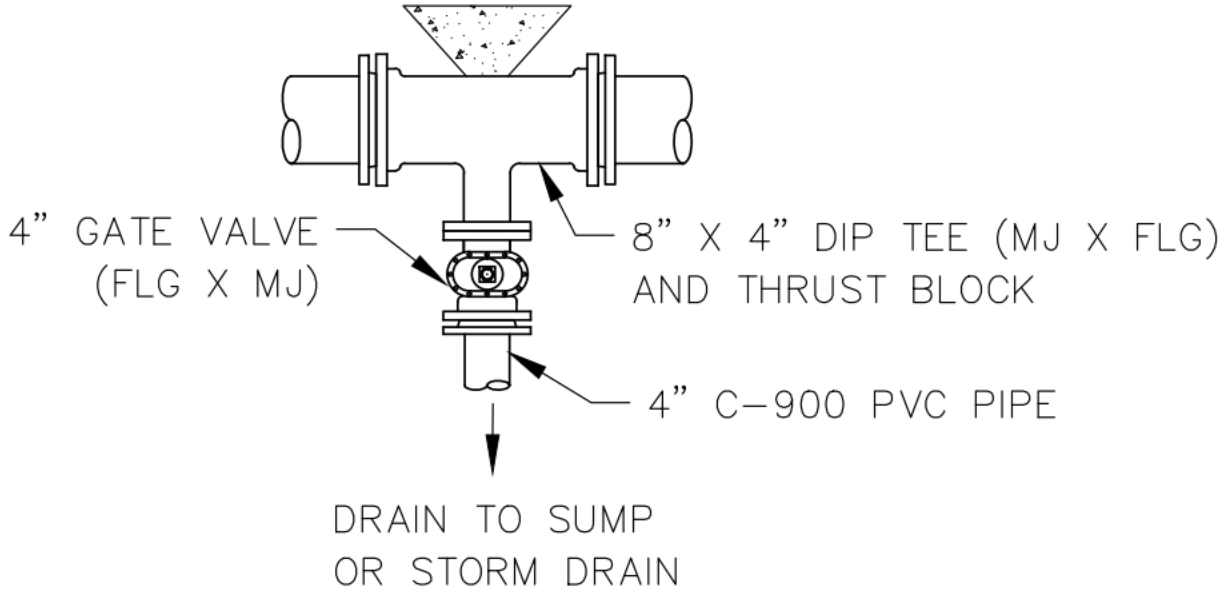

STATEMENT OF USE

THIS DOCUMENT AND ANY ILLUSTRATIONS HEREON ARE PROVIDED AS STANDARD CONSTRUCTION DETAILS WITHIN HIGHLAND CITY. DEVIATION FROM THIS DOCUMENT REQUIRES APPROVAL OF HIGHLAND CITY. HIGHLAND CITY CORP. CAN NOT BE HELD LIABLE FOR MISUSE OR CHANGES REGARDING THIS DOCUMENT.

NO.	REVISION DESCRIPTION	BY	APR	DATE

FILE: HIGHLAND CITY PI-04 DRAIN DETAIL

DRAWN BY: ####

DESIGN BY: ####

CHECKED BY: ####

LAST UPDATED: 1/29/2015

HIGHLAND CITY

HIGHLAND CITY
PUBLIC WORKS AND ENGINEERING

P.I. DRAIN DETAIL

STD DWG #

PI-04

Plot Date: 1/29/2015 3:23 PM Plotted By: Jason Bradford
Date Created: 7/23/2014 H:\PROJECTS\314 - HIGHLAND CITY\05.100 - MISC CONSULTING\STANDARD DETAILS\HIGHLAND CITY PI-04 DRAIN DETAIL.DWG

P.I. BLOW-OFF IN CUL-DE-SAC
END IN PARKSTRIP ON PROPERTY LINE

(S S USΓD W ΓN ΓLOW DRΛ NS OU OΓ CUL DΓ SΛC)

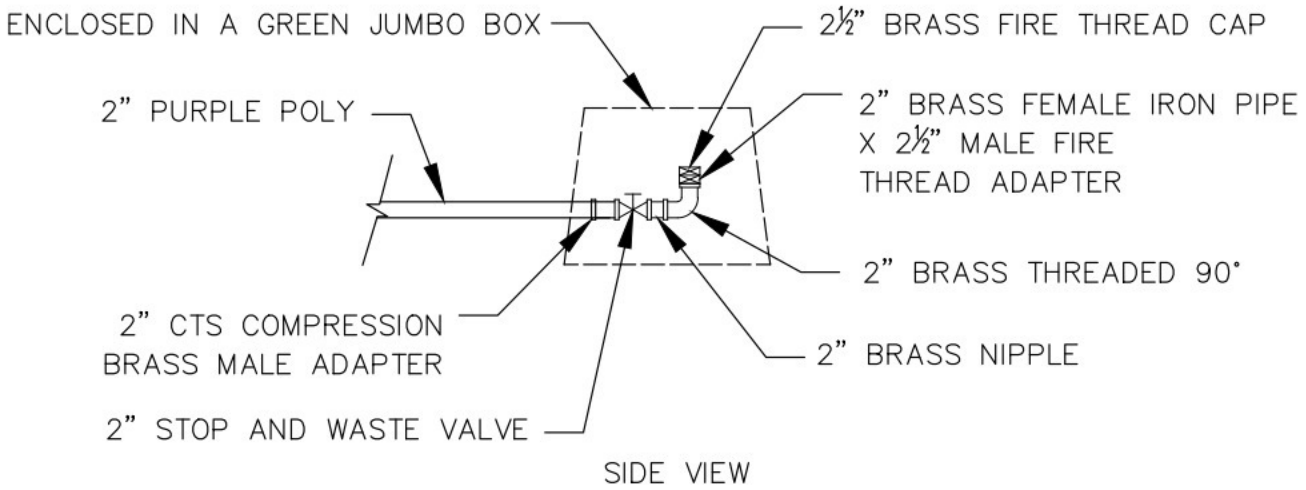

SIDE VIEW

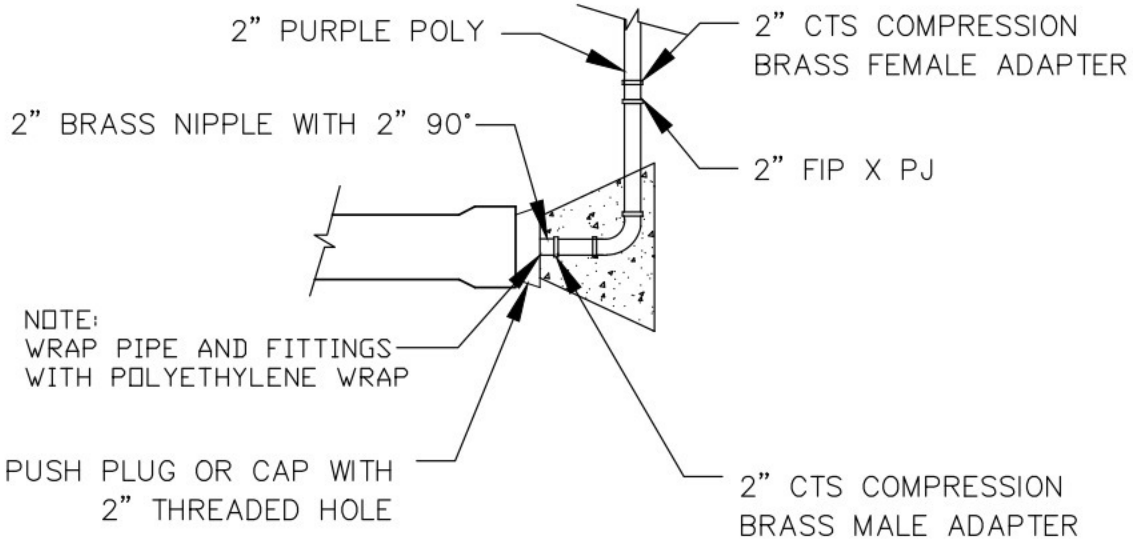

TOP VIEW

Plot Date: 1/29/2015 3:28 PM Plotted By: Jason Bradford
Date Created: 7/23/2014 H:\PROJECTS\314 - HIGHLAND CITY\05.100 - MISC CONSULTING\STANDARD DETAILS\HIGHLAND CITY PI-05 BLOW-OFF IN CUL-DE-SAC DETAIL.DWG

NO.	REVISION DESCRIPTION	BY	APR.	DATE

FILE: HIGHLAND CITY PI-05 BLOW-OFF IN CUL-DE-SAC DETAIL
DRAWN BY: ####
DESIGN BY: ####
CHECKED BY: ####
LAST UPDATED: 1/29/2015

HIGHLAND CITY
PUBLIC WORKS AND ENGINEERING

P.I. BLOW OFF IN CUL-DE-SAC

STD DWG #
PI-05

TEMPORARY P.I. BLOW-OFF

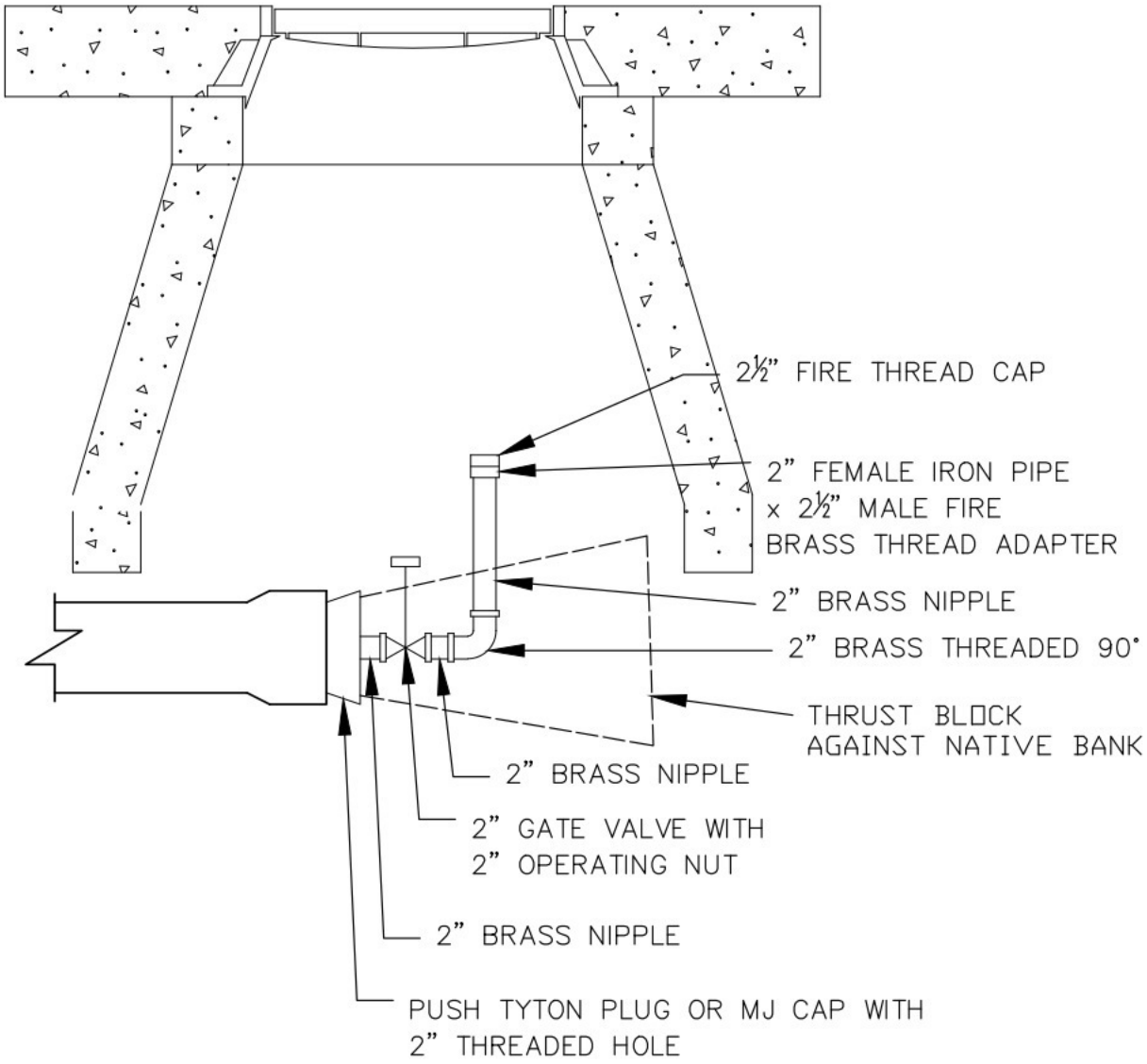

NOTE:
THIS IS ENCLOSED IN A 60" MANHOLE CONE
MANHOLE LID TO SAY "IRRIGATION". CONE TO
BE PLACED OVER PIPE AND THRUST BLOCK.
NO LOAD SHALL BEAR ON THE PIPE FROM THE CONE.

NO.	REVISION DESCRIPTION	BY	APR.	DATE

FILE: HIGHLAND CITY PI-06 TEMPORARY PI BLOW-OFF DETAIL
DRAWN BY: ####
DESIGN BY: ####
CHECKED BY: ####
LAST UPDATED: 1/29/2015

HIGHLAND CITY
PUBLIC WORKS AND ENGINEERING

TEMPORARY P.I. BLOW-OFF DETAIL

STD DWG #
PI-06